Title
The Life Time of the Pi+ Meson. Thesis

Author
Martinelli, E.A.

Publication Date
1949-11-01

UNIVERSITY OF CALIFORNIA

Radiation Laboratory

BERKELEY, CALIFORNIA

DISCLAIMER

UCRL 459

cy 3

The Lifetime of the Positive π Meson

By

Ernest Angelo Martinelli
B.S. (University of California) 1941

DISSERTATION

Submitted in partial satisfaction of the requirements for the degree of

DOCTOR OF PHILOSPHY

in

Physics

UNCLASSIFIED

in the

GRADUATE DIVISION

of the

UNVIERSITY OF CALIFORNIA

Approved:

. . . .

. . . .

. . . .

Committee in Charge

Deposited in the University Library . . . .
Date Librarian

TABLE OF CONTENTS

LIST OF TABLES

T

LIST OF ILLUSTRATIONS

THE LIFETIME OF THE π^+ MESON

E. A. Martinelli

I. Introduction.

The meson theory of nuclear forces, initiated by Yukawa[1] in 1935 considers the forces between two nucleons as the interaction of the particles with a meson field. In an analogous way, the coulomb force between particles is considered as the interaction of the particles with the electromagnetic field. Carrying the analogy further, one knows that moving electric charges produce radiation which can be quantized, the quanta being photons. In the case of the meson field the quanta are mesons.

Yukawa suggested that the short range of nuclear forces could be accounted for if the mesons had a finite rest mass, the range then being given by $\hbar/mc$ the Compton wave length for the meson. In order to account for a range of 2.8×10^{-13} cm. the mass should be of the order of 140 Mev or 280 electron masses. The mesons were also presumed to be unstable with regard to beta decay in order to account for the fact that they had not been seen. Particles of about this mass were discovered in cosmic rays two years later, the mass reported by Brode[2] being 215 ± 5 electron masses or 110 Mev. The lifetime for the β-decay of these mesons has also been measured as 2.15 ± .07[3].

Further investigation of the properties of these mesons, primarily scattering and absorption experiments[4,5] indicated that the interaction of these particles with nuclei was too small to account for nuclear forces[6]. In view of this, Bethe and Marshak[7] proposed a two meson theory in which the observed (μ) meson arises from the decay of a heavier (π)

The heavy meson was presumed to be closely coupled to the nucleons and would therefore be produced at high altitude by the nuclear collisons of the primary protons.

Using the available cosmic ray data, Bethe and Marshak were able to put an upper limit on the lifetime of the proposed π meson.

1. If 10 percent of the mesons in the experiments on the capture of negative μ mesons by nuclei[4] were π mesons, a lifetime which would allow this or a smaller fraction of π's to penetrate the atmosphere is

$$\tau_\pi \leq 1.5 \times 10^{-6} \text{ sec.}$$

2. From scattering experiments on mesons[5] it was found that mesons were rarely scattered at angles greater than 20°, the cross section being less than 1 percent of nuclear cross sections. Since the π mesons should be tightly coupled to the nucleus, the cross section for large angle scattering of π mesons should be of the order of nuclear dimensions. Hence less than 1 percent of the mesons at sea level should be π mesons. A heavy meson should possess 25 Bev to penetrate the atmosphere. Therefore, if 20 km is taken as the height of the production layer, one has an upper limit:

$$\frac{20 \text{ km}}{c\,\tau_\pi} \cdot \frac{\mu_\pi c^2}{25 \text{ Bev}} \geq 1 ,$$

or

$$\tau_\pi \leq 3 \times 10^{-7} \text{ sec.}$$

where c represents the velocity of light, τ_π, the lifetime, and μ_π, the mass of the π meson.

3. A still closer but less certain limit was estimated as follows. From the fact that sea-level mesons traverse 1000 meters of water equivalent it follows that such mesons are μ mesons of $\sim 2 \times 10^{11}$ ev. From the smoothness of the absorption curve of mesons under ground it follows that π mesons of the order of 2×10^{11} ev must decay before making nuclear collisions. The mean free path for such collisions at the production level is about 10 km. Thus

$$\frac{10 \text{ km}}{c \tau_{\pi}} \cdot \frac{\mu_{\pi} c^2}{200 \text{ Bev}} \geqslant 1 ,$$

or

$$\tau_{\pi} \leqslant 2 \times 10^{-8} \text{ sec.}$$

Shortly after this result was presented, Lattes et al[8], found cosmic ray evidence for an event which could be interpreted as the decay of a heavy meson into a lighter one. A lower limit on the lifetime of 10^{-11} sec could be established from the length of time the heavy meson spent in traversing the emulsion.

Later at Berkeley, Gardner and Lattes[9] found that mesons were produced by bombardment of various targets with 380 Mev alpha particles. The mesons were found to be π mesons, whose mass from measurements at Berkeley is 276 ± 6[10] electron masses.

An unsuccessful attempt to measure the lifetime of the π meson was made by C. F. Powell et al[11].

After the discovery of the production of mesons with the 184-inch cyclotron, Lattes[12] was able to put an experimental limit on the lifetime ($\tau \geqslant 5 \times 10^{-9}$ sec.) and later Richardson[13] made a measurement of the lifetime and arrived at

$$\tau_{\pi} = 7.7 \pm \begin{matrix} 2.1 \\ 1.6 \end{matrix} \times 10^{-9} \text{ sec.}$$

for the negative π meson. This result was based on a relatively small number of mesons (48) and on only one point of the decay curve. Since the lifetime is rather intimately connected with meson theories and enables one to check some of the proposed coupling schemes between the π meson and the μ meson, and the μ meson and nucleons, it was felt that an improvement on Richardsons experiment was necessary.

II. Discussion of the Method.

Due to the relatively short lifetime estimated for π-u decay it was recognized that a time of flight method for determining the lifetime was possible. For example if the half life is assumed to be 10^{-8} sec. the distance traveled by a 10 Mev meson in this time is of the order of a meter. Therefore, if one had a parallel beam of π mesons and measured the decrease in density of mesons as a function of the distance traveled one could determine the decay time.

The situation however is not quite this simple. It is known from other experiments[10] that the mesons formed in the cyclotron target have a wide energy and angular distribution. Therefore in a simple time of flight experiment one would have to measure a decrease in density beyond the inverse square law and restrict oneself to a narrow energy band in order to maintain a known time of flight. With the present magnitude of the external cyclotron beam this experiment is limited by the scarcity of mesons. It might be feasible if an electronic method of detection were possible; but with photographic plate detection, the microscope time would be prohibitive.

The method used, essentially that of Richardson[13], circumvents these two objections. First, by using the 360° focusing properties of a uniform magnetic field it reduces the geometrical loss from r^{-2} to r^{-1} where r is the distance traveled, and secondly, the magnetic field, except for relativistic effects* makes the time of flight per revolution essentially independent of the energy, enabling one to use a

---

* See Section III, Paragraph 7.

large energy region for determing the lifetime.

Fig. II-1 shows schematically the experimental arrangement. The cyclotron beam strikes the carbon target producing mesons which are emitted in all directions and with various energies. These then move along helical paths in the magnetic field of the cyclotron. Channels provided in the copper shielding select positive mesons within a small angular interval about 180° from the beam direction, and an energy interval of 8 Mev to 14 Mev. One of the channels accepts a bundle of helical paths which are rising from the target while the other accepts the equivalent bundle descending from the target. Since the mesons are focussed in one dimension, the loss from the channel is only linear. The developed view Fig. II-2 and the photographs Fig. II-3 and Fig. II-4 give a good picture of the channel.

Photographic plates are placed at 180° from the target in the upper channel and at either 540° or 900° in the lower spiral. The ratio of π mesons found at 180° to those found at either one of the other angles enables one to determine two points on the decay curve for the π meson.

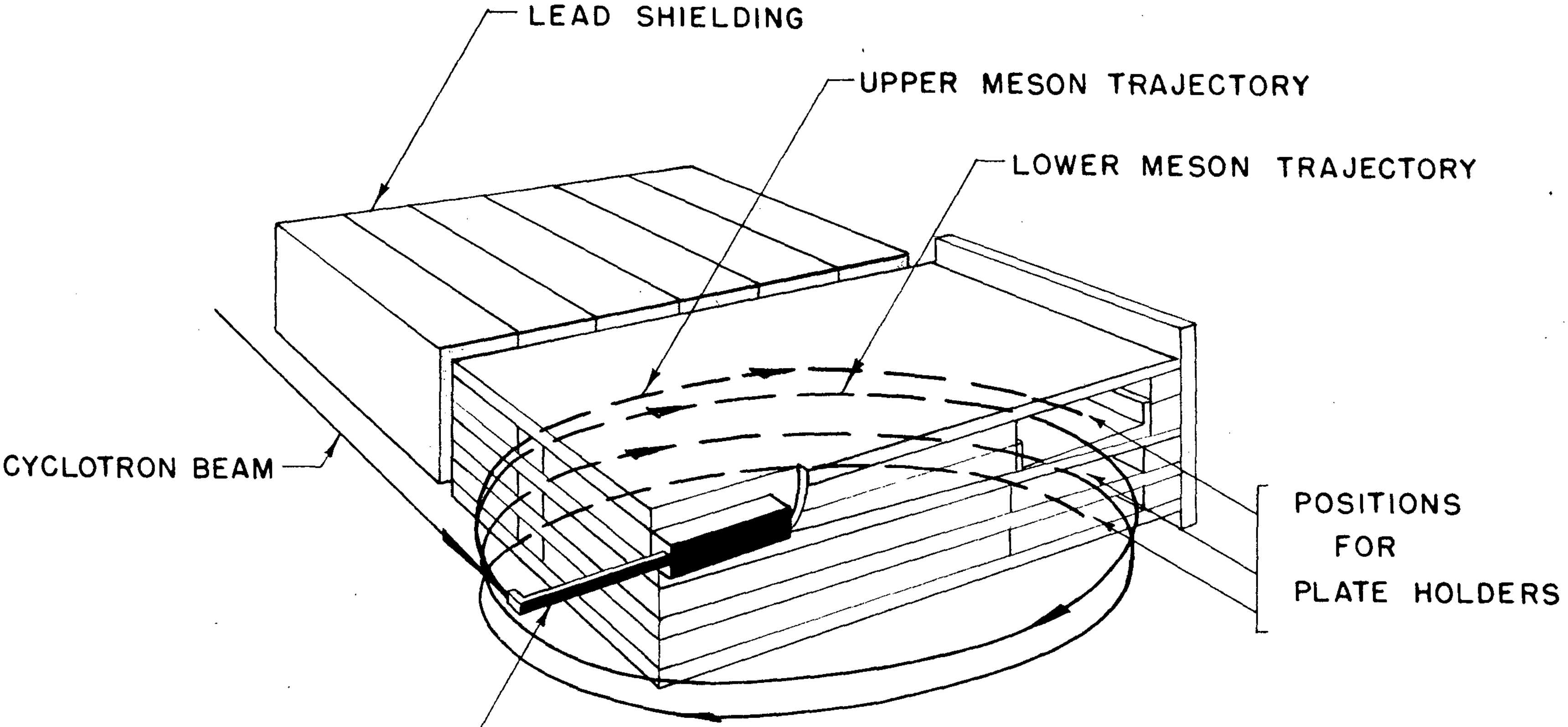

SCHEMATIC VIEW OF APPARATUS

FIG. II - I

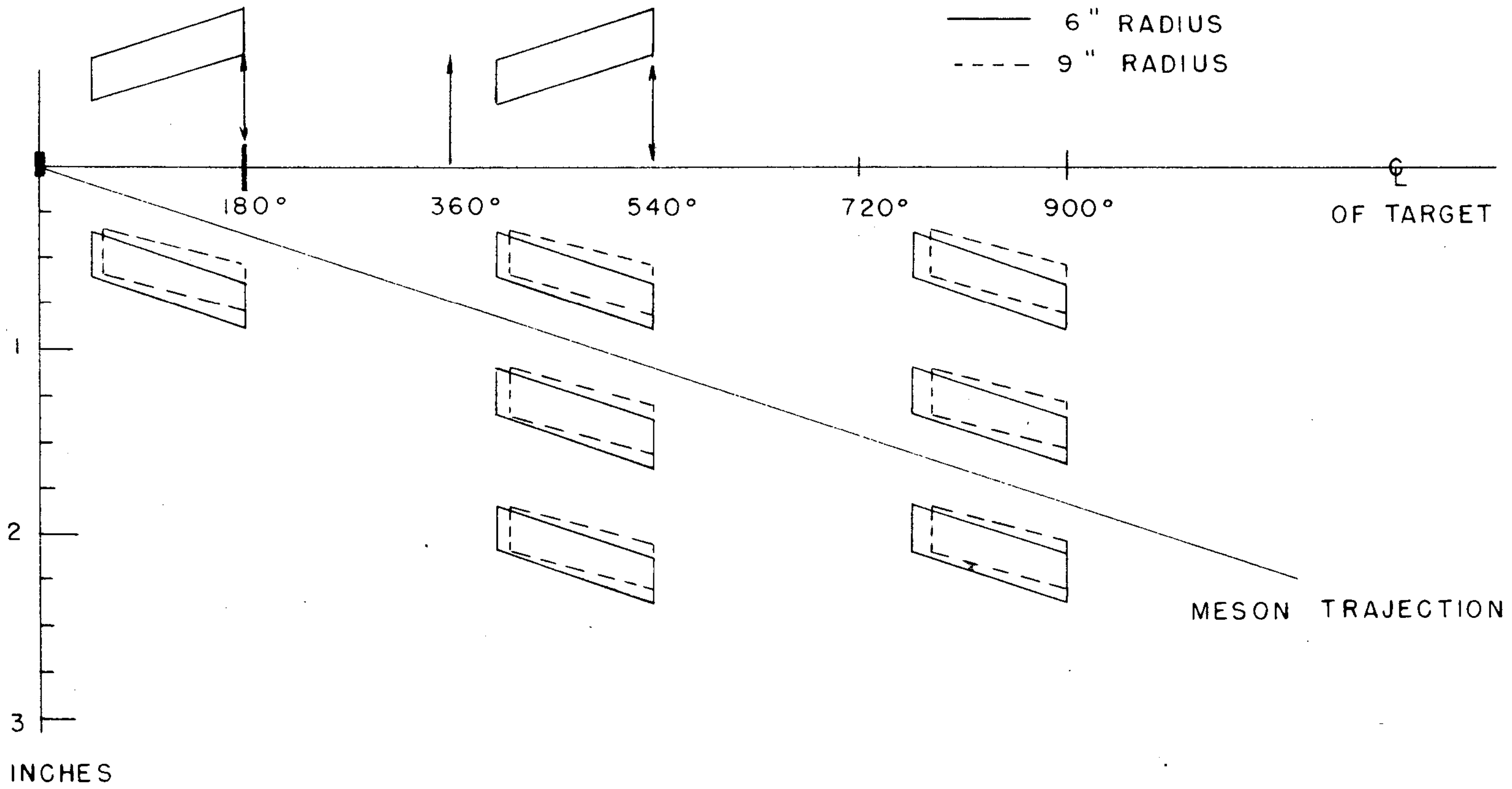

FIG. II - 2

DEVELOPED VIEW OF CHANNEL

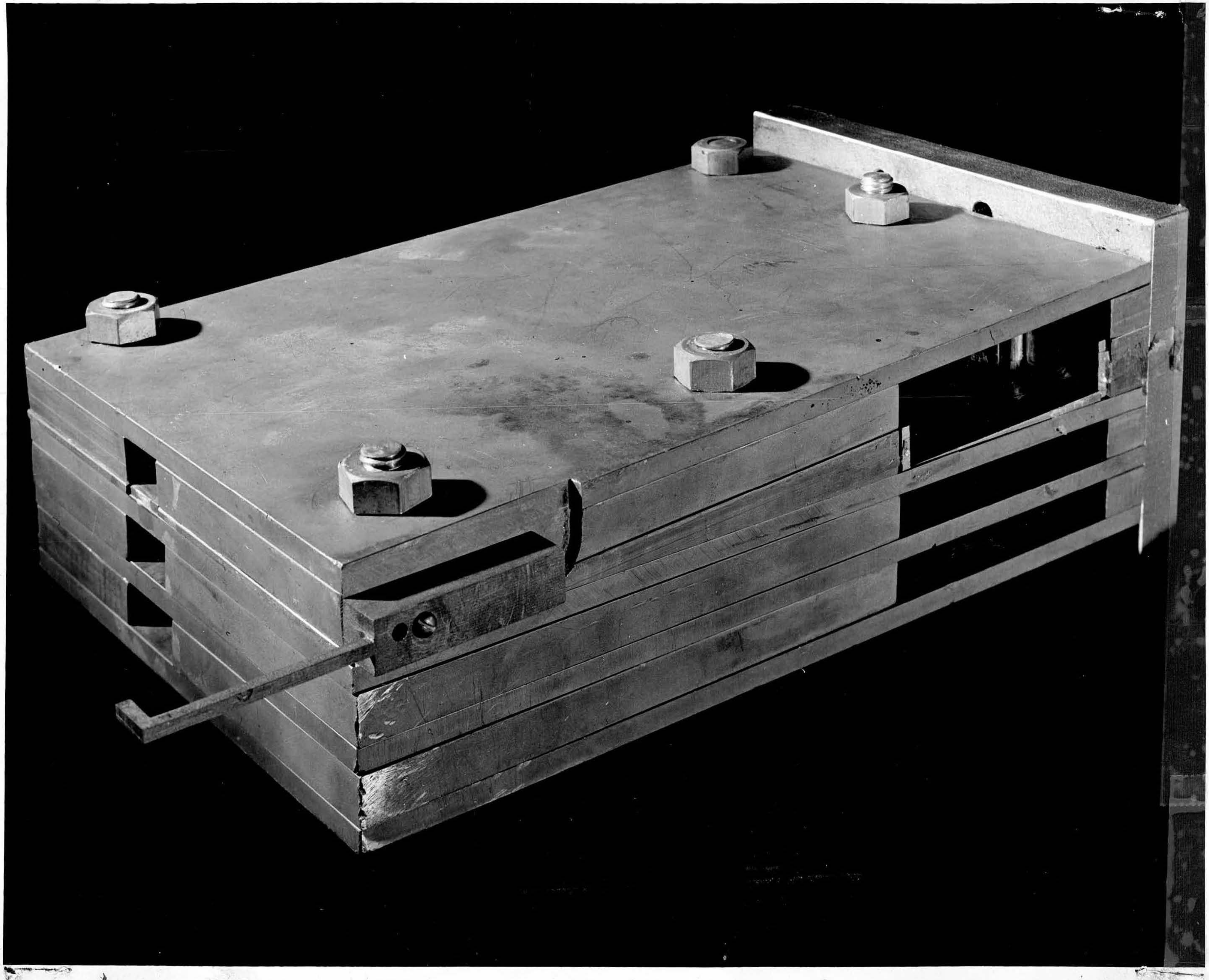

G.P.R. 473

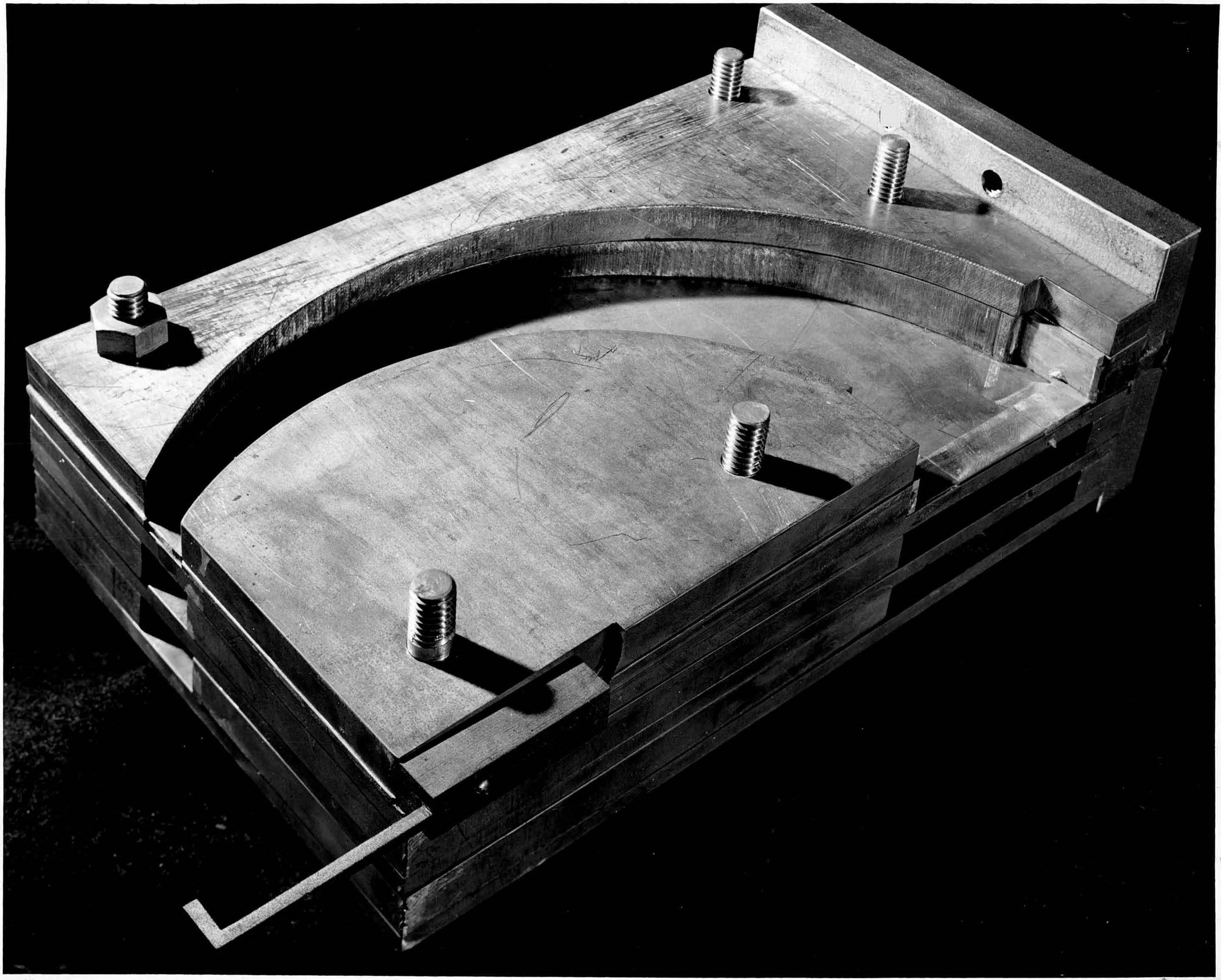

G. P. R. 474

Fig. II-4

III. Details of the Method.

1. Choice of Energy Region

In the earlier experiment of Richardson only the 380 Mev alpha particle beam of the 184-inch cyclotron was available for producing mesons. His choice of fairly low energies was dictated by the success of other exposures with the same energy interval. However when the 350 Mev protons beam came into operation it was estimated that the number of mesons produced would greatly increase and that the peak of the energy distribution would be at quite a high energy. It therefore appeared desirable to measure the lifetime at higher meson energies than those used by Richardson.

Early experiments with the proton beam indicated that much better ratios of the number of meson tracks to the number of unwanted tracks were obtained by exposing the plates at larger distances from the target and therefore at higher energies. However an upper limit to the meson energy which can be used for this experiment is imposed by the available space in the cyclotron air lock. The energy that was chosen is the maximum allowed by this restriction.

2. Plate Type

The type of plates used for this experiment were Ilford C-3 100 μ plates. These are slightly more sensitive than the Ilford C-2 plate and therefore facilitate finding the μ meson in the $\pi-\mu$ decay. This aids considerably in identifying a meson as a π meson.

3. Type of plate Holder

In Richardson's experiment the emulsion was sandwiched between glass and the edge of the plate was exposed to the mesons. This procedure is fairly good only if precise measurements are not wanted since there is a variation in the thickness of the emulsion of around ± 15 percent. To avoid this error, each plate holder contains two plates as shown in Fig. III-1. The solid angle accepted by such a device is independent, to the first order, of its orientation. This can be shown as follows:

The solid angle Ω accepted by the plate holder is

$$\Omega \propto \tan(\alpha + \varepsilon) + \tan(\alpha - \varepsilon).$$

Expanding this expression by well known trigonometric formulas one gets

$$\Omega \propto \frac{\tan\alpha + \tan\varepsilon}{1 - \tan\alpha\tan\varepsilon} + \frac{\tan\alpha - \tan\varepsilon}{1 + \tan\alpha\tan\varepsilon} .$$

Since both α and ε are small, one has

$$\Omega \propto \frac{\alpha + \varepsilon}{1 - \alpha\varepsilon} + \frac{\alpha - \varepsilon}{1 + \alpha\varepsilon} ,$$

or, since $\alpha\varepsilon << 1$,

$$\Omega \propto 2\alpha(1 + \varepsilon^2).$$

Hence, Ω is independent of ε to the first order. The value of α for the plate holder used in the experiments is about $\frac{1}{5}$ radian. Thus, even if ε were $\frac{1}{10}$ radian, only a 1 percent error in the sum of the numbers of meson tracks on the two plates would be introduced, although the numbers of tracks on each plate separately would differ by a factor of about 3.

page 9 omitted

In terms of θ ,

$$r - R \simeq - \rho_R \sin\theta \, .$$

Hence,

$$\rho(\theta) \sim \frac{H(R)\rho_R}{H(R)\left[1-n(R)\,\frac{\rho R}{R}\sin\theta\right]} = \rho_R\left[1-n(R)\frac{\rho R}{R}\sin\theta\right] .$$

Substituting in the expression for x one has

$$x = \int_0^{2\pi} \rho_R\left(1-n_R\,\frac{\rho R}{R}\sin\theta\right)\sin\theta\, d\theta \, .$$

The data for the experiment are:

$n(R) = .02$

$\rho R = 6$ in.

$R = 71$ in.

$x \cong .030$ in./revolution

To accommodate this precession the lower channels were widened 1/16 of an inch.

b. Estimate of Vertical Focussing Due to Non-Uniform Magnetic Field.

Referring to Fig. III-4 for notation, one can write the equation of motion in the (z) direction for a charged particle as

$$m\frac{d^2z}{dt^2} = \frac{H_r\,(\delta)\,\omega\rho\, e}{c}\cos\theta \, ,$$

the right side being the vertical force on a charged particle moving in a horizontal field H_r. The time t can be eliminated by substituting $\theta = \frac{t}{\omega}$ where $\omega = \frac{eH}{mc}$ is the non-relativistic cyclotron frequency for the meson.

Since the mesons spiral in small circles at the edge of the cyclotron field, an investigation of the motion of charged particles in a non-uniform magnetic field was undertaken.

The motion was analyzed in two ways. In the horizontal plane the non-uniform field causes the small circular orbits to precess about the center of the cyclotron. The effect on the vertical motion is to introduce some vertical focussing, so that the particle instead of maintaining its vertical component of velocity will oscillate about the central plane of the magnetic field. The purpose of the following calculations is to estimate the magnitude of these effects.

a. Rate of Precession of Orbit in the Field of a Cyclotron Magnet.

Referring to Fig. III-3 for notation, the displacement x in one revolution can be written as

$$x = \int_0^{2\pi} \rho \quad (\theta) \sin \theta \, d \, \theta$$

An approximate expression for ρ (θ) can be obtained by noting that during the motion of the particle the product $H\rho$ where H is the magnetic field and ρ is the radius of curvature of the orbit, remains constant. Since the deviation from a circle is small the radius of curvature is nearly the same as the distance from the initial center. Thus, $\rho(\theta) \simeq \frac{H\rho}{H(\theta)}$.

It is now convenient to introduce a quantity

$$n(r) = - \frac{r}{H} \frac{dH}{dr} .$$

Expanding H about R one has

$$H = H(R) \left[1 - n(R) \frac{r-R}{R}\right] .$$

In terms of θ ,

$$r - R \simeq - \rho_R \sin\theta \, .$$

Hence,

$$\rho(\theta) \sim \frac{H(R)\rho_R}{H(R)\left[1-n(R)\;\frac{\rho_R}{R}\sin\theta\right]} = \rho_R\left[1-n(R)\frac{\rho_R}{R}\quad\sin\theta\right]$$

Substituting in the expression for x one has

$$x = \int_0^{2\pi} \rho_R \left(1-n_R\;\frac{\rho_R}{R}\quad\sin\theta\right)\sin\theta \, d\theta \, .$$

The data for the experiment are:

$n(R) = .02$

$\rho_R = 6$ in. ρ_R

$R = 71$ in.

$x \simeq .030$ in./revolution

To accommodate this precession the lower channels were widened 1/16 of an inch.

b. Estimate of Vertical Focussing Due to Non-Uniform Magnetic Field.

Referring to Fig. III-4 for notation, one can write the equation of motion in the (z) direction for a charged particle as

$$m\,\frac{d^2 z}{dt^2} = \frac{H_r\,(\theta)\,\omega\rho\, e}{c}\quad\cos\theta \, ,$$

the right side being the vertical force on a charged particle moving in a horizontal field H_r. The time t can be eliminated by substituting $\theta = \frac{t}{\omega}$ where $\omega = \frac{eH}{mc}$ is the non-relativistic cyclotron frequency for the meson.

The equation of motion then becomes

$$\omega^2 m \frac{d^2 z}{d\theta^2} = H_r \frac{\omega \rho e}{c} \cos\theta .$$

From Maxwell's equations, curl H = 0, which gives for a two dimensional field

$$\frac{\partial H_z}{\partial r} - \frac{\partial H_r}{\partial z} = 0.$$

Integrating, one has

$$H_r = \frac{\partial H_z}{\partial r} z ,$$

and from the previous calculations,

$$H_r = - n(r) \frac{H(r)}{r} z ,$$

Substituting this expression into the equation of motion one has

$$\frac{d^2 z}{d\theta^2} = - \frac{n(r)}{r} \rho \cos\theta \, z .$$

with the choice of θ which is indicated in Fig. III-4 $\frac{n(r)}{r}$ is an even periodic function of θ, and therefore $R \cdot \frac{n(r)}{r} \cos\theta$ may be expanded in a Fourier cosine series. Let

$$\frac{R}{r} n(r) \cos\theta = a_0 + a_1 \cos\theta + a_2 \cos 2\theta + \dots$$

Then

$$\frac{d^2 z}{d\theta^2} + \frac{\rho a_0 z}{R} = a_1 \frac{\rho z}{R} \cos\theta + a_2 \frac{\rho}{R} \cos 2\theta + \dots$$

Equating the left side to zero gives a simple harmonic solution of frequency

$$\bar{\omega} = \sqrt{\frac{\rho a_0}{R}}$$

where a_0 is given by

$$a_0 = \frac{1}{\pi} \int_0^{\pi} \frac{R\, n(\theta)}{r(\theta)} \cos\theta\, d\theta \, .$$

If the pitch of the helix is a, then the zero order solution becomes

$$z_0 = \frac{2\pi a \rho}{\bar{\omega}} \sin \bar{\omega}\, \theta \, .$$

Substituting this value of z on the right side of the equation of motion one has:

$$\frac{d^2 z}{d\theta^2} + \rho \frac{a_0}{R} z = \frac{a_1 \rho}{R} \left(\frac{2\pi a \rho}{\bar{\omega}} \sin \bar{\omega}\theta \right) \cos\theta + a_2 \frac{\rho}{R} \left(\frac{2\pi a \rho}{\bar{\omega}} \sin \bar{\omega}\theta \right) \cos 2\theta \, .$$

Since

$$\sin A \cos B = \frac{1}{2} \sin (A + B) + \frac{1}{2} \sin (A - B^*) \, ,$$

one has, considering only the first term on the right,

$$\frac{d^2 z}{d\theta^2} + \frac{\rho a_0 z}{R} = \frac{\pi a}{\bar{\omega}} \frac{a_1 \rho^2}{R} \left\{ \sin(\bar{\omega} + 1)\theta \sin (\bar{\omega} - 1)\theta \right\} \, .$$

An approximate solution for $\bar{\omega} << 1$ gives

$$z = \frac{2\pi a \rho}{\bar{\omega}} \left[\sin \bar{\omega}\, \theta + \frac{a_1 \rho}{R} \cos\theta \sin \bar{\omega}\, \theta \right] \, .$$

Graphical integrations for a_0 and a_1 were made for several target positions.

and it was found necessary to perform the experiment with the target at 65 in. At this radius $a_o \sim .002$ and $a_1 = .02$ for the central trajectory. With these numbers one has $\bar{\omega} = .012$ rad-1. Hence at 900°, the max. angle of the focussing cycle is $5\pi \times .012 = 0.18$ radians. Since sin $.18 = 0.179$, the deviation from the helical path is only 0.5 percent of 1.875 in. ~ .010 in. which would not be detected. The a_1 term gives a deviation from the helical path of .02 in. at 900°. However, since the emulsion is not that close to the channel the effect should be negligible.

6. Calibration of the Geometry.

Since the motion of a particle in a magnetic field is characterized by its $H\rho$, it is possible to check the geometrical decay of the channel experimentally by replacing the target with a thick alpha-particle source.

An alpha particle source of approximately 10^7 alphas/sec was constructed by Mr. William Crane for this purpose. It was necessary to have the activity concentrated in an area the size of the target (1/8 in.^{2}) since with larger sizes part of the source would be blocked from the far positions.

Only the 900° point was checked in this way. The data (Table III-1 show that the ratio of the number of alpha particles which arrive at the 180° position to the number which arrive at the 900° position is uniform across the plate and that the deviation from the expected ratio 5 is within the probable error.

Table III-1

Distance along plate from the low-energy side (cm.)	Ratio $\frac{\alpha\text{'s at } 180}{\alpha\text{'s at } 900}$
2	5.07 ± .25
3	5.62 ± .28
4	5.04 ± .25
5	4.99 ± .25
6	5.23 ± .25
Weighed Average	5.16 ± .14

For the computation of the lifetime the geometrical factors of 3 for the 540° position and 5 for the 900° position were used.

7. Relativistic Effects on the Lifetime Measurement.

Since the energies of the mesons are in the neighborhood of 10 Mev whereas the rest mass is 145 Mev the relativistic effects will be small.

It is simple to show however that using a large energy interval will not affect the lifetime measurement[15]. This is a consequence of measuring the lifetime in terms of the decay per revolution in the field. Thus, although it is time that an observer would see the lifetime lengthened for the higher energy mesons by a factor $\frac{1}{\sqrt{1 - \beta^2}}$ it is equally true that the period per revolution as seen by the observer would also be lengthened by $\frac{1}{\sqrt{1 - \beta^2}}$. Thus, the fraction decaying per revolution would be independent of β.

It is interesting to note that if the experiment were carried out accurately for both slow and fast mesons it would provide a proof for the twin paradox; for although the fast mesons spend a longer time in space than the slower mesons before returning to the target, they both appear to be of the same age as measured in half-lives.

8. Method Employed to Reduce Background.

In order to make exposures it was necessary to provide additional shielding. Fig. III-5 shows the arrangement of the shielding in the cyclotron.

Since the target is very small compared to the beam height it was necessary to provide a stop for the beam on the other side of the cyclotron. After the beam strikes this block some of the protons are scattered into the copper channel holder. It was found from other experiments that these protons were the cause of a great deal of the background tracks in the plates. To eliminate them, a large carbon block was placed in the dee approximately

90° away from the target. As an additional precaution about 8 in. of lead was mounted in the cyclotron on the beam side of the channel. With these measures it was possible to get readily readable plates.

9. Types of Runs.

a. Meson Exposures

Exposures of 10, 30, 60, 120 and 240 seconds were made so that the optimum time was sure to be bracketted. The plates were loaded on the darkened cyclotron platform. Leveling of the channel, which is necessary to insure correct geometry, was accomplished by means of a level attached to the cyclotron probe. The position of the shielding was checked with a current reading probe. The distance to the block at the smallest radius was determined by observing the radius at which the current measured by the probe vanished.

b. Meson Background

In order to find out how many mesons were capable of getting to the plates without going through the prescribed channel, identical exposures to the above were made with the downward channel blocked at 180°.

The ratios of the numbers of mesons at 180° to that at 540° and that at 900° in these runs give a measure of the background.

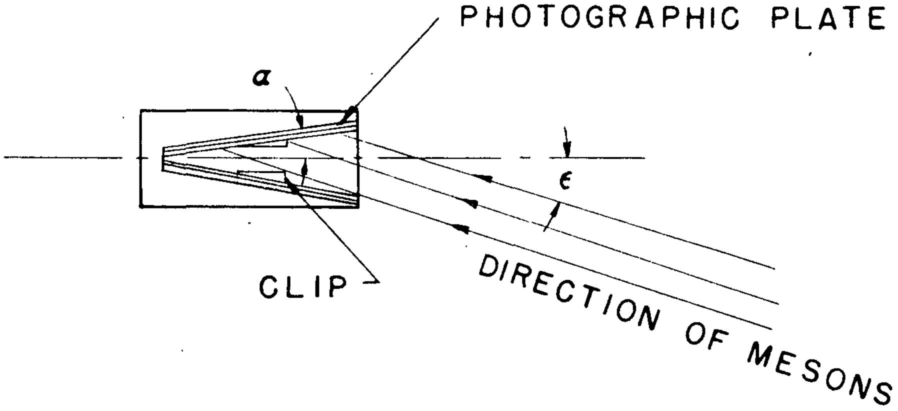

FIG. III - 1

PLATE HOLDER GEOMETRY

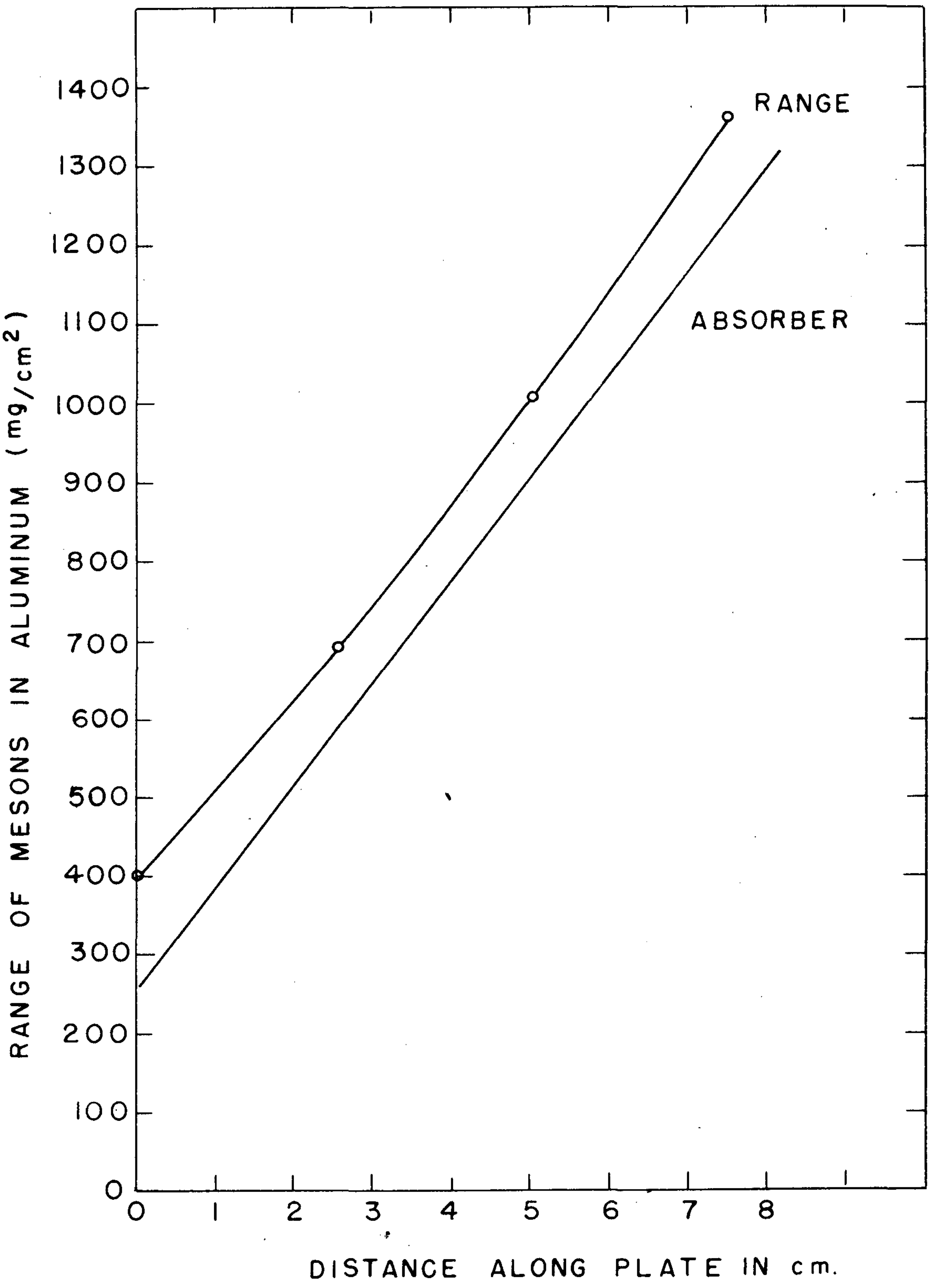

FIG. III - 2
GEOMETRY FOR ABSORBER

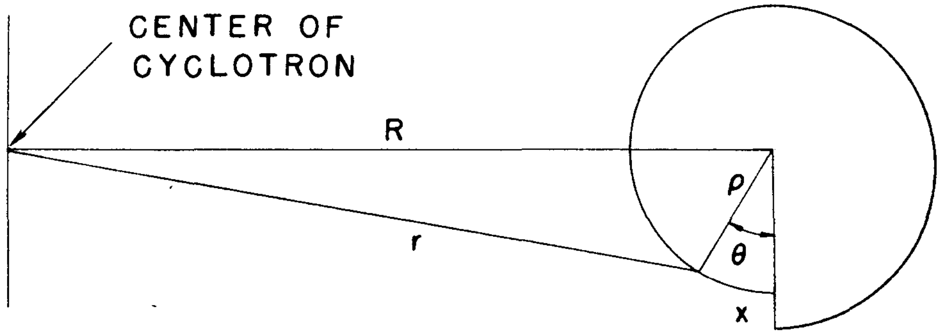

FIG. III - 3

COORDINATES FOR PRECESSION MEASUREMENTS

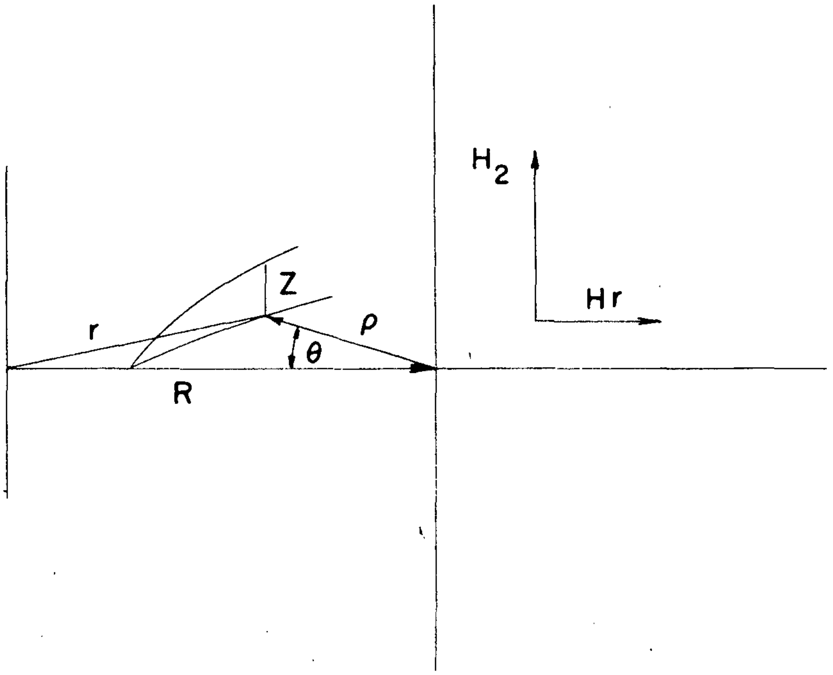

FIG. III - 4

COORDINATES FOR FOCUSING CALCULATION

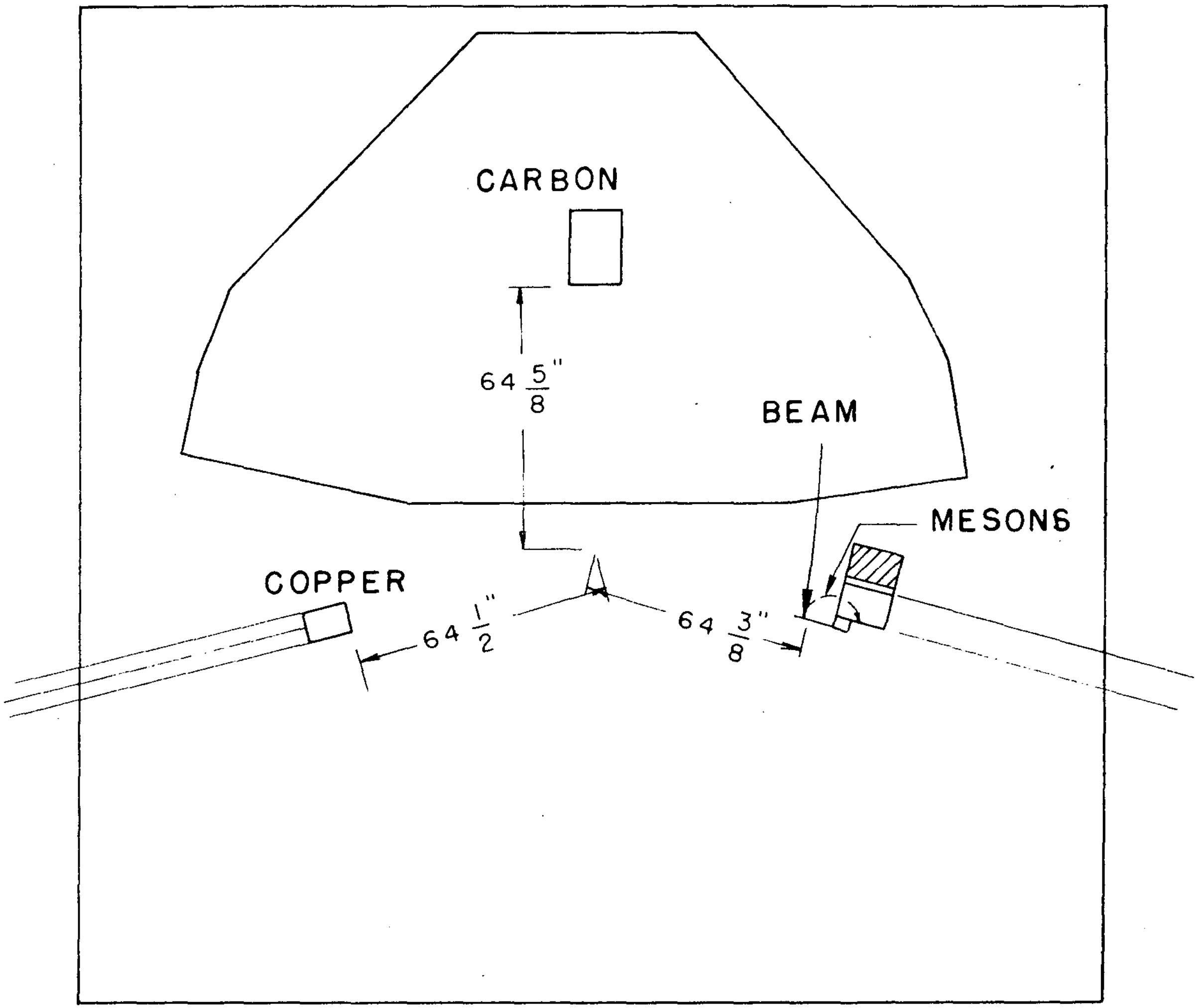

FIG. III - 5

LOCATION OF SHIELDING IN THE CYCLOTRON

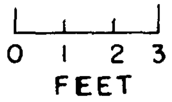

IV. Evaluation of Data

1. Method of Scanning Plates

The plates were scanned using a Spencer microscope with a 1.8 mm oil immersion achromatic objective and 6 power eyepiece. This results in a field of view of approximately 250 micron in diameter.

Two methods of measuring the scanned area were used depending on the meson density in the plate. For the plates exposed at 180° a reticule with 2 parallel rulings which marked a region 73 microns wide in the field of view was used. The plate was scanned parallel to the direction of the mesons and only mesons stopping in the 73 micron swath were tabulated. In this way the area is found by measuring the total length of scan. For the plates at 540° and 900° it was desirable to utilize all of the mesons in a given area. This was especially true of the 900° plates where the total number of mesons available was not very great. In these cases the observation was done by taking overlapping scans. At the end of each swath the plate was moved 100 microns so that there was an overlap of about 150 microns. The area was then obtained from the vernier on the microscope stage. For the 180° plates this method would have lead to confusion as to which mesons had already been tabulated.

2. Results of Background Tests.

Table IV-I shows the data which were obtained from the background plates.

Table IV-1

Position	Number of π-μ Decays	Area Scanned mm^2	Density of Mesons/No/mm^2
180°	21	20	.953
540°	3	160	.0187
180°	70	60	1.17
900°	3	800	0.00375

These data give the following ratios:

$$\frac{\text{Density at } 540^\circ}{\text{Density at } 800^\circ} = 0.0197 \pm 0.09$$

and

$$\frac{\text{Density at } 900^\circ}{\text{Density at } 180^\circ} = .00320 \pm .0012.$$

Since the statistical errors on the background ratios are so large, the ratios will not be used for correction but will be incorporated in the probable error of the final result.

3. Tabulation of the Data for the Lifetime Measurement.

Among the meson tracks observed, those were counted which showed a definite $\pi-\mu$ decay and were therefore certain to be due to π^+ mesons. Also counted were those tracks which could be identified as mesons but which did not stop in the emulsion, and those meson tracks which stopped in the emulsion but for which no decay track could be found. Table IV-2 gives a summary of the data.

Table IV-2

Plate No.	Position	No. of $\pi-\mu$ Decay	No. Scattered out of the emulsion	No Showing No Decay	Area Scanned mm^2
6603	180°	166	41	4	43.8
6602		130	37	3	43.8
6601	540°	114	45	6	140
6600		127	51	5	140
6571	180°	204	73	10	58.4
6570		148	50	7	58.4
6569	900°	116	42	7	400
6568		114	45	6	400

The reliability of the count for mesons which did not stop in the emulsion is not very high since the identification is not certain in many cases and such tracks are easily overlooked if one is intent on observing mesons that stop. In view of the uncertainty of this number, the data appear to be quite consistent as to the fraction which stops in the emulsion. The mesons going through the emulsion were not included in the computation of the lifetime since some of them might very well be μ mesons. Those meson tracks which did not appear in conjunction with decay meson tracks are probably due to μ mesons, π mesons which do not decay by μ formation or mesons which stopped in a region of the plate which would not record a μ meson of 4 Mev.

4. Computation of the Lifetime.

a. Reduction of the Data.

Considering only the $\pi - \mu$ decays recorded in Table IV-2, the density of mesons at the various positions may be compiled. These are recorded in Table IV-3.

Table IV-3

Position	Density of Mesons in Plates No/mm^2
180°	$3.48 \pm .14$
540°	$0.862 \pm .036$
180°	$3.02 \pm .10$
900°	$.288 \pm 0.012$

These values give the following ratios:

$$\frac{\text{Meson density } 540^\circ}{\text{Meson density } 180^\circ} = \frac{0.862}{3.48} = 0.248 \pm .014,$$

$$\frac{\text{Meson density at } 900^\circ}{\text{Meson density at } 180^\circ} = \frac{0.288}{3.02} = 0.0954 \pm .0052 \ .$$

If the life time were infinite, the expected ratios would be 0.333 and 0.200 respectively. The decrease in density due to decay in flight if normalized to 1 at 180° is then given by Table IV-4

Table IV-4

Position	Relative Density R (due to decay in flight)
180°	1.00
540°	$0.743 \pm .042$
900°	$0.476 \pm .026$

All of the errors recorded are purely statistical.

b. Evaluation of the Lifetime and Assignment of Errors.

In order to average the 540° and 900° points in such a way that the errors could be computed, the 540° point was extrapolated to 900° by using the mean life computed from the 540° point. The probable error at the extrapolated point was doubled. Thus from Table IV-4 the ratio R at 540° is:

$$R_{540^\circ} = 0.743 \pm 5.6 \text{ percent.}$$

Extrapolated to 900° this gives:

$$R_{540^\circ} = 0.564 \pm 11.3 \text{ percent.}$$

The ratio obtained from the 900° data is:

$$R_{900^\circ} = 0.476 \pm 5.45 \text{ percent.}$$

Averaging these two 900° points by weighing inversely with the square of the probable errors gives:

$$R_{900^\circ \text{av.}} = \frac{.476\ (4.32) + .564}{5.32} = 0.492 \pm .024,$$

the probable error being computed by weighing in the same way.

From this value the mean life in cyclotron revolutions is easily computed to be:

$$\tau = 2.84 \pm 0.20 \text{ revolutions.}$$

The cyclotron frequency is given by:

$$\omega = \frac{He}{mc} .$$

On substituting the following numbers:

$H = 14295$ gauss (plotted data on the cyclotron field),

$e = 4.8024 \times 10^{-10}$ esu.[16]

$m = 9.1055 \times 10^{-28}$ grams[16],

$c = 2.99776 \times 10^{10}$ cm/sec[16],

$\omega = .90466\ 10^{9}\ \text{sec}^{-1}$.

No deviation has been assigned the value since the errors are all insignificant compared to the statistical error in the mean life. The period per revolution is therefore

$$\tau = 0.6945 \times 10^{-8} \text{ sec.}$$

Using this number one gets for the mean and half lives

$$\tau = 1.97 \pm 0.139 \times 10^{-8} \text{ sec.}$$

$$\tau_{1/2} = 1.37 \pm 0.095 \times 10^{-8} \text{ sec.}$$

In addition to these statistical errors there is a probable error in the geometrical ratio of approximately 3 percent. On combining the errors one arrives at the following limits.

1. In the upward direction,

$$\frac{\Delta\tau}{\tau} = \sqrt{(.07)^2 + (.03)^2} = 0.076 \quad .$$

2. In the downward direction,

$$\frac{\Delta\tau}{\tau} = \sqrt{(.07)^2 + (.03)^2 + (.05)^2} = 0.086 \quad .$$

Using these errors one has as the final result.

$$\tau = 1.97 \pm \begin{matrix} .14 \\ .17 \end{matrix} \times 10^{-8} \text{ sec.}$$

$$\tau_{1/2} = 1.37 \pm \begin{matrix} .10 \\ .12 \end{matrix} \times 10^{-8} \text{ sec.}$$

Although this result is somewhat outside of Richardsons' published value,

$$\tau_{1/2} = 7.7 \pm \begin{matrix} .21 \\ .16 \end{matrix} \times 10^{-9} \text{ sec. ,}$$

it can be seen from Fig. IV-1 that the disagreement is not as extreme as is implied. Certainly one could not say that the experiment shows a difference between the π^+ and π^- mesons.

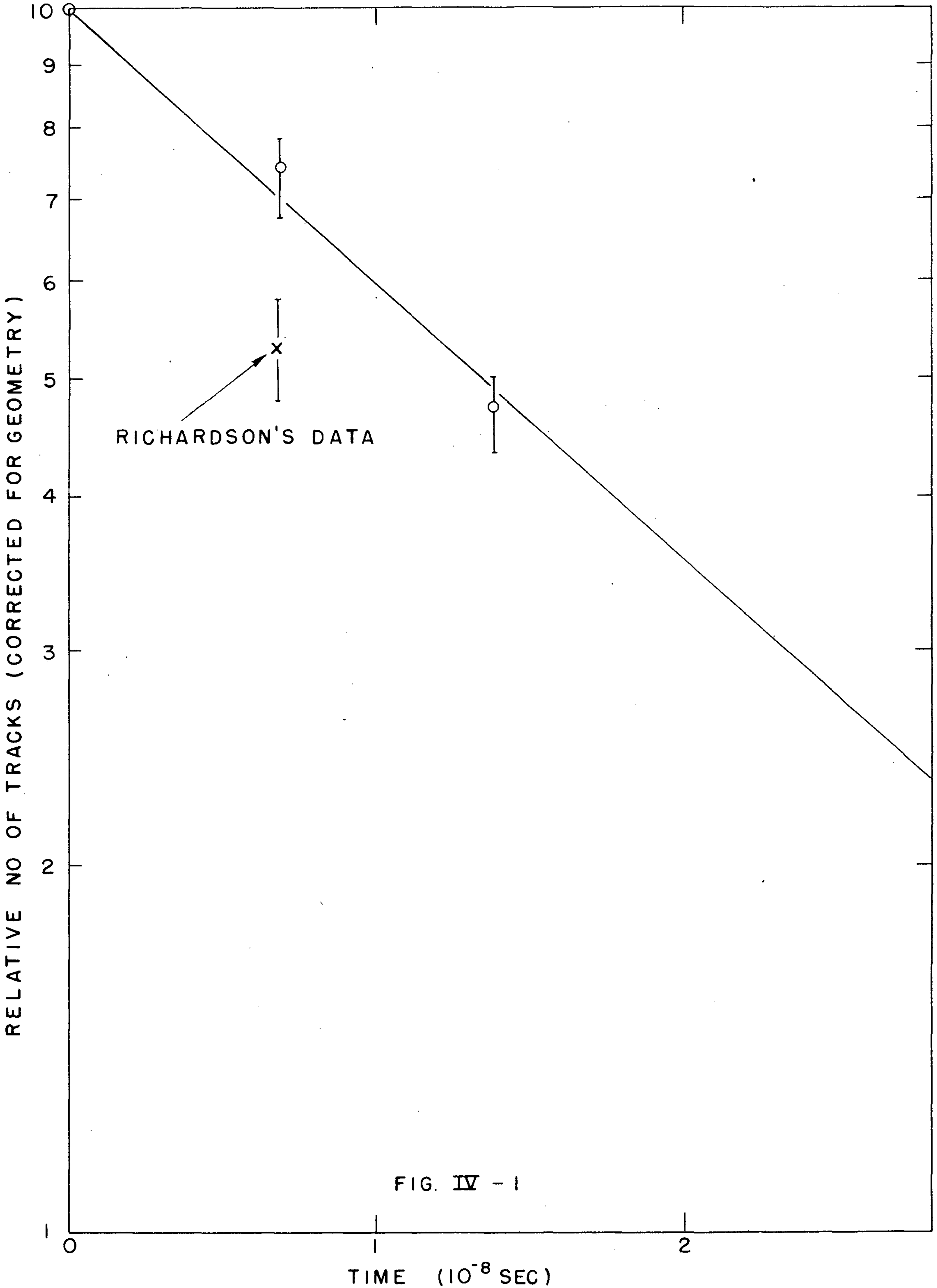

FIG. IV - 1

14003-1

V. Discussion of the Result.

Two schemes have been proposed for the decay of the π^- meson into a μ meson and neutrino.

1. The π meson is coupled to the nucleons and the nucleons to the μ meson neutrino field. The decay of the π meson then goes via a virtual nucleon pair. The capture of μ mesons from the K orbit goes directly.

2. The π meson is coupled to both the μ meson and the nucleons. In this case $\pi - \mu, \nu$ decay is direct whereas the capture of μ mesons goes through an intermediate π field.

Three related data are available which the process must fit.

1. The lifetime of the $\pi\mu$ decay.
2. The rate of μ capture from the K orbit of a nucleon.
3. The strength of nuclear forces.

Latter and Christy[17] have computed the lifetime of the $\pi - \mu$ decay for the second scheme for various types of meson fields from the capture time of μ mesons for $Z = 10$ of about 3.3×10^{-6} seconds. Agreement with the observed lifetime was found for the cases of a scalar π meson going to a scalar or pseudoscalar μ meson and neutrino and a scalar π going to a spin 1/2 μ and neutrino and possibly a vector π to a spin 1/2 μ and neutrino. The neutrino in each case was the character of the μ meson.

The calculations for the first scheme has divergence difficulties. However Steinberger[16] by using a subtraction method valid for electrodynamics has been able to compute a finite lifetime for the process which is much longer than the observed value. Previous estimates of this lifetime, obtained by arbitrarily cutting off the divergent integrals gave results which agreed with the observed lifetime. This however, was due to the fact that the coupling constant which was required to account for nuclear forces was about 1.

VI. Acknowledgements.

The author wishes to express his gratitude to the members of the committee for their continued interest in the research and especially to Dr. W. K. H. Panofsky for his personal assistance in much of the work. Thanks are also due to Prof. L. W. Alvarez for his interest and critical advice on the problem, to Prof. R. Serber and Dr. J. Steinberger for discussion on theoretical implications, to H. Bradner and E. Gardner for the loan of the microscope, to the Photographic Group and Information Division of the Radiation Laboratory for their valuable assistance, and finally to the cyclotron crew, especially Mr. J. Vale for their Job like patience during the running of this experiment.

References

1. H. Yukawa, Proc. Physico-Mak. Sci., Japan 17, 48 (1935)
2. Robert B. Brode, Rev. of Mod. Phys., 21, 37 (1949)
3. N. Nereson and B. Rossi, Phys. Rev. 64, 199 (1943)
4. M. Conversi, E. Panciuni, and O. Piccioni, Phys. Rev. 71, 209 (1947)
5. R. H. Shutt, Phys. Rev. 69, 261 (1945)
6. R. E. Marshak, Phys. Rev. 72, 509 (1947)
7. R. E. Marshak, H. A. Bethe, Phys. Rev. 72, 506 (1947)
8. Lattes, Muirhead, Occhalini, and Powell, Nature 159, 694 (1947)
9. E. Gardner and C. M. G. Lattes, Science 107, 270 (1948)
10. H. Bradner, UCRL 443 (to be submitted for publication in Phys. Rev.)
11. Camarini, Muirhead, Powell, Ritson, Nature 162, 433 (1948)
12. C. M. G. Lattes, Private communication.
13. J. R. Richardson, Phys. Rev. 74, 1720 (1948)
14. W. Aron, B. Hoffman and F. Williams, UCRL 121 revised, Nov. 1948.
15. W. G. Swann, Phys. Rev. 76, 157 (1949)
16. J. W. M. DuMond and E. R. Cohen, Rev. of Mod. Phys. 20, 82-108 (1948)
17. Latter and Christie, Phys. Rev. 75, 1459 (1949)
18. Steinberger, to be published.