Title
Digital Subtraction Angiography

Journal
CHEST Journal, 84(1)

ISSN
0012-3692

Authors
Tobis, Jonathan M
Nalcioglu, Orhan
Henry, Walter L

Publication Date
1983-07-01

DOI
10.1378/chest.84.1.68

Digital Subtraction Angiography*

Jonathan M. Tobis, M.D.; Orhan Nalcioglu, Ph.D.; and Walter L. Henry, M.D.

One of the main thrusts of current cardiovascular research is the development of new technologies that will allow improved diagnostic accuracy with less invasive approaches. Echocardiography, radionuclide angiography, and pulsed Doppler techniques are examples of noninvasive methods that are successful in revealing important anatomic and physiologic information about the heart and great vessels. Nevertheless, invasive hemodynamic assessment and contrast angiography are still essential for high diagnostic accuracy when evaluating atherosclerotic cardiovascular disease. Because coronary artery disease is the most common cause of morbidity and mortality in this country, there are approximately 225,000 invasive cardiac catheterizations performed each year.[1] There are an additional 300,000 peripheral arteriographic studies performed each year in the United States.

Recent developments in high speed digital computers provide a new means for making contrast angiography less invasive. Special image processing computers have been developed which can enhance radiographic images so that much lower concentrations of iodinated contrast material can be visualized. This permits direct intraventricular injections of dye to be performed with 10 to 15 ml (or one-fourth the standard amount) of contrast, thus decreasing the risk of the procedure and permitting multiple assessments to be made of left ventricular function without increasing the total amount of contrast material or radiation exposure to the patient. Alternatively, the heart chambers and large arterial systems can be visualized after an intravenous injection of 30 to 40 ml of contrast material. This new technology is known as digital fluoroscopy if the study is performed in a continuous fluoroscopic mode, or digital radiography if the study is performed in a pulsed radiographic mode. The most common means of processing the image is by a method called mask mode subtraction, hence the usual term for this technique is digital subtraction angiography (DSA). This review will describe the principles involved in digital subtraction angiography and explore some of the clinical applications for this technology in peripheral vascular and cardiac diagnosis.

The use of computers to enhance radiographic images was pioneered by Mistretta at the University of Wisconsin, Nudelman at the University of Arizona, and Heintzen and Brennecke in Kiel, West Germany. Mistretta et al[2-7] developed the capability for real time processing of video fluoroscopic x-ray images. They built a dedicated computer to perform various video processing techniques such as mask subtraction and time interval difference (TID) imaging. Nudelman et al[8,9] explored the use of high resolution digital video angiography by digitizing video images from high resolution television cameras. Initially, they stored all their data on digital tape in sequential mode. They also used mask subtraction as a postprocessing scheme. Brennecke, Heintzen et al[10,11] pioneered the use of digital fluoroscopic images for quantitative applications in cardiology. Nalcioglu et al[12] developed correction schemes to improve the accuracy of digital fluoroscopic calculations.

Digital angiography is now clinically feasible because digital computers have been developed that are small and can process data at a very high speed. The development of small, high speed digital computers has occurred at a rapid pace. For example, in the mid to late 1960s, computer systems were available for automating analysis of hemodynamic data.[13] These computer systems used room-sized computers and performed analog to digital conversion of data at a rate of 200 conversions per second. Current digital image processing computers are the size of a large tape recorder and may perform up to 20 million analog to digital conversions per second. The major components of these newly developed image processing computers are schematically represented in Figure 1. The incoming fluoroscopic television signal is amplified by a logarithmic amplifier and then converted from an analog to a digital format. The digitized signal of the incoming picture can either be stored in the memory section of the computer or processed through an

---

*From the University of California, Irvine; and the Division of Cardiology and Department of Radiological Sciences, Orange, CA.
Reprint requests: Dr. Tobis, Division of Cardiology, 101 City Drive, Orange, California 92668

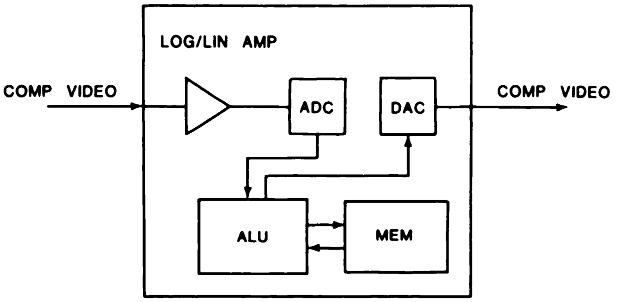

FIGURE 1. Essential components of a digital image processing computer. The incoming composite video represents the signal from the image intensifier television chain as well as a synchronization pulse. The signal is logarithmically amplified and then converted from an analog to digital format (*ADC*, analog-digital converter). The digitized signal is then sent into an arithmitic logic unit (*ALU*) where manipulation of the image, such as during the subtraction process, can occur. The computer has a memory component (*MEM*) which can store several frames of digitized information. The image in the memory can be transferred back into the arithmetic logic unit for image processing, as during mask mode subtraction. The resultant image after arithmetic processing is reconverted by a digital to analog converter (*DAC*) into a composite video signal for storage on videotape.

arithmetic logic unit where the image data are manipulated. After the image is processed, the signal is reconverted from digital to analog format in order to store the study on analog videotape. Alternatively, the digital data can be stored directly onto a disk or digital tape. Although digital storage of the complete study would be perferable in terms of decreased noise, analog storage of data presently is used in many cardiac applications because 30 frames per second data storage often is required, and digital memory still is relatively slow and expensive.

A schematic diagram of the connections of the digital angiography computer into a standard catheterization laboratory is depicted in Figure 2. For digital fluoroscopy, the x-ray control panel usually is altered to yield higher currents in the x-ray tube than is used during standard fluoroscopy. The x-ray image from the output of the image intensifier is transformed into an electrical (analog video) signal by a television camera. The analog video signal output from the television camera is sent to the image processing computer. The computer converts the analog video signal from each television frame into digits (*ie*, numbers) using a matrix of small picture elements or pixels (Fig 3). For vascular imaging, a 512×512 matrix is preferable. For cardiac imaging, it is also necessary that this process occur in real time, preferably at a rate of 30 frames per second. To preserve information about density differences in the image, it is also necessary that each pixel has the capacity to differentiate numerous shades of gray in the image. In many systems, each pixel is encoded into one of eight computer binary numbers or bits which allows the encoding of the x-ray density in each pixel of the image into 256 shades of gray. Thus, for cardiac imaging, it is preferable that the computer process the image so that the black and white x-ray image is digitized into at least 262,144 pixels, each one representing one of 256 gray shades. Such a system permits image resolution that is sufficient to visualize coronary arteries and allows satisfactory quantitation of the contrast densities in the image. Once an image is digitized, the picture is less subject to noise interference, and mathematical image processing computations can be made with the gray scale densities. Mask mode subtraction is one such image processing strategy which has been found useful for enhancing radiographic images.

During mask mode subtraction, an initial fluoroscopic or pulsed x-ray exposure is obtained, digitized, and stored as a mask. After the mask is obtained, contrast media is injected intravenously. A continuous fluoroscopic image is obtained and digitized by the computer into a 512 by 512 by 8 bit deep matrix at

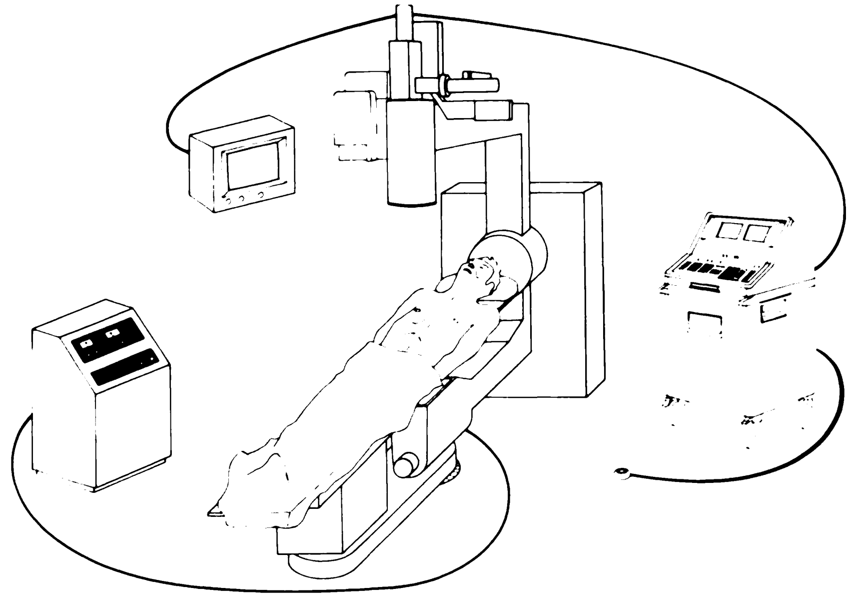

FIGURE 2. The central portion of this diagram of a catheterization laboratory represents the standard catheterization table, x-ray tube and image intensifier unit. In order to process digital angiograms, the x-ray control panel, as depicted in the left-hand side of the diagram, must be adjusted to deliver a higher exposure during fluoroscopy. The video signal from the television camera above the patient can be displayed on a television monitor or can be directed into the portable digital processing computer as shown on the right side of this diagram.

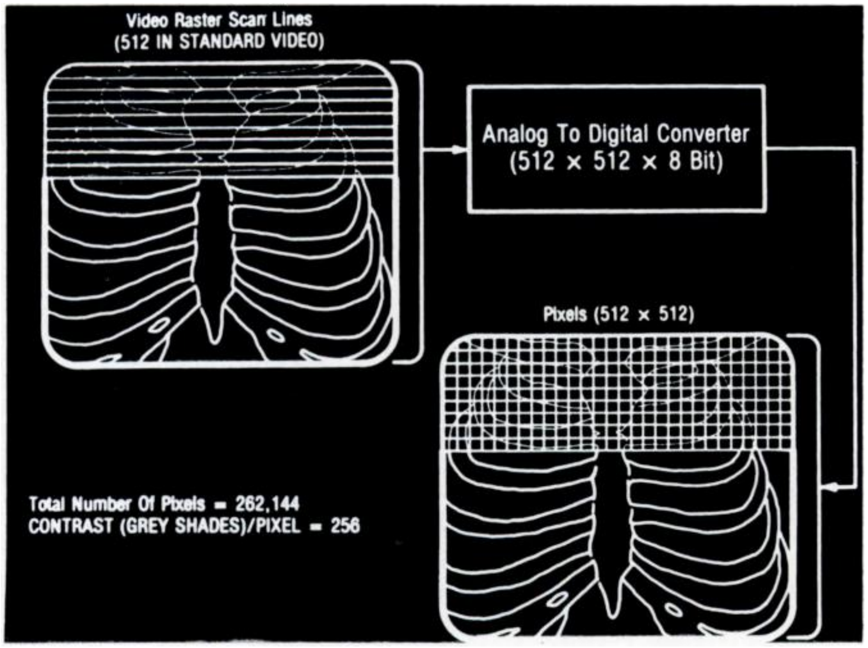

FIGURE 3. The analog to digital converter processes a television image of a fluoroscopic picture into a digital matrix. Each picture element has an 8-bit depth which provides 256 shades of gray differentiation. The total number of pixels = 262,144. Contrast (gray shades)/pixel = 256.

standard television rates of 30 frames per second. Each frame is subtracted pixel by pixel digitally in real time from the stored mask, converted back to analog format, and the resultant image displayed on the television monitor in the catheterization laboratory and stored on a video tape recorder. If no dye was injected and if there was no motion of soft tissues between the mask and the subsequent images, the subtracted picture will be blank with cancellation of all bone and soft tissue signals. However, if contrast media were injected after the mask was obtained, the subtracted image will yield an image of the iodinated vascular structures which is not obscured by overlying soft tissues and bones (Fig 4). Because mask mode subtraction helps to eliminate soft tissue or bone densities in the image, visualization of the arterial system is enhanced. The major disadvantage of this method is misregistration artifact which develops if motion occurs, such as respiration, between the time the mask was obtained and the new images are processed. If such motion occurs, the mask will not totally cancel out all soft tissues, and misregistration artifacts will appear in the image.

One important benefit of digital angiography is the ability to reprocess the image after the study is performed. During postprocessing, the image is reconverted from videotape storage into a digital format. The contrast and brightness of the image can be manipulated or a new mask can be chosen to help improve the quality of the image. An example of the postprocessed image of a low dose (10 ml) left ventriculogram is shown in Figure 5.

PERIPHERAL ANGIOGRAPHIC APPLICATIONS

One of the major advantages of digital angiography is that it allows angiograms to be performed without directly entering the arterial system. Intravenous

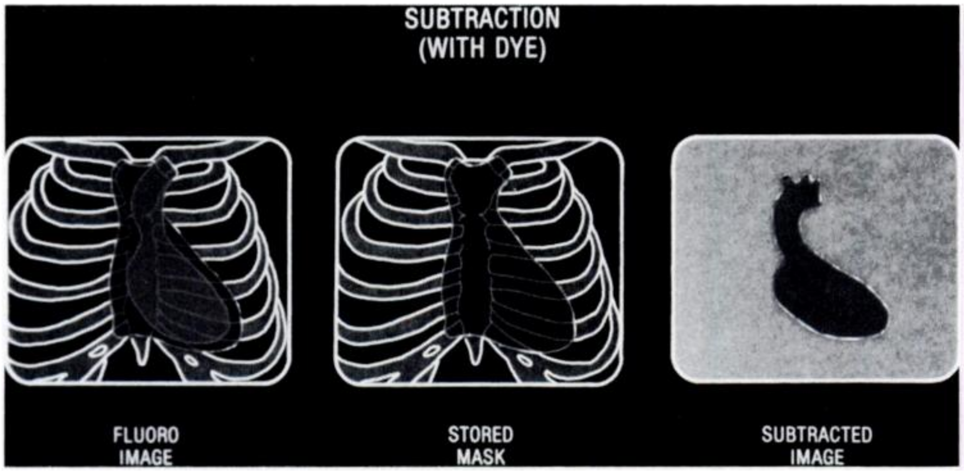

FIGURE 4. When dye is injected intravenously, a first pass image of the cardiovascular structures is obtained. The subtracted image highlights the iodine within the cardiovascular silhouette and the background soft tissues and bone densities are eliminated.

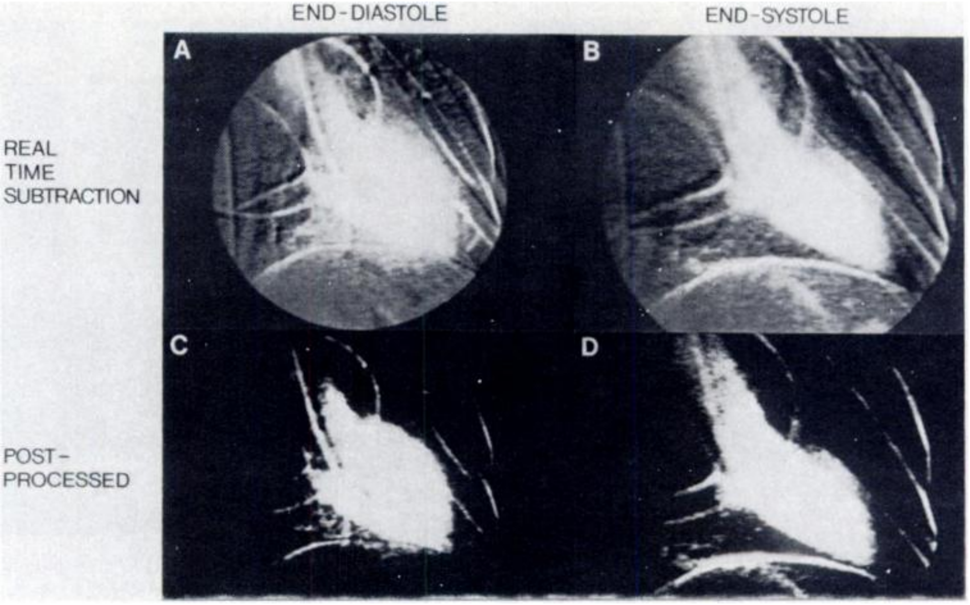

Figure 5. This composite photograph from a television monitor demonstrates the end-diastolic and end-systolic images of the left ventricle obtained by injecting 10 ml of contrast material in the left ventricle and processing the video signal in real time by digital subtraction. *A*, end-diastolic; and *B*, end-systolic images prior to postprocessing; *C* and *D*, the same images after contrast enhancement.

administration of contrast medium enhanced by digital processing can yield high quality angiograms of the aortic, carotid, renal, and femoral arterial systems. The resolution capability of digital subtraction angiography is approximately two line pairs per millimeter, which is adequate to visualize stenoses in large arteries.

Although 30 frames per second image processing capacity is desirable for cardiac imaging, most investigators have used higher energy pulsed exposures (400 to 1300 mÅ) at rates of one to four per second for peripheral angiography.[14] Since peripheral arterial systems do not move significantly, a slow exposure rate is feasible to increase image contrast visibility and improve signal-to-noise ratio. The major problem to be overcome is patient movement which causes motion artifact or misregistration between the mask and subsequent images. Despite this problem, adequate angiograms can be obtained in approximately 80 percent of studies. In large centers where thousands of peripheral and standard angiographic studies have been performed, vascular surgeons are beginning to rely on digital angiograms in making decisions as to when and where to operate.

Another area in which digital angiography is beginning to have significant clinical impact is angiographic screening of large populations. This screening is made feasible by the intravenous technique. For example by altering the way standard radiographic information is processed, a patient undergoing an intravenous pyelogram can have his or her renal arteries imaged as well. Aortic arch angiograms can also be obtained following an intravenous injection of contrast medium. Congenital malformations, such as coarctation, can be visualized and other abnormalities, such as subclavian steal or dissection, have been observed (Fig 6).

Intravenous digital angiography also may have a significant impact as a screening modality in the evaluation of suspected pulmonary emboli. Ventilation-perfusion radionuclide lung scans are most helpful when they are negative or grossly positive. However, the results in a large proportion of V/Q studies fall in between these extremes. The clinician is then faced with the decision to prescribe anticoagulants to a patient who may have a false positive V/Q scan or

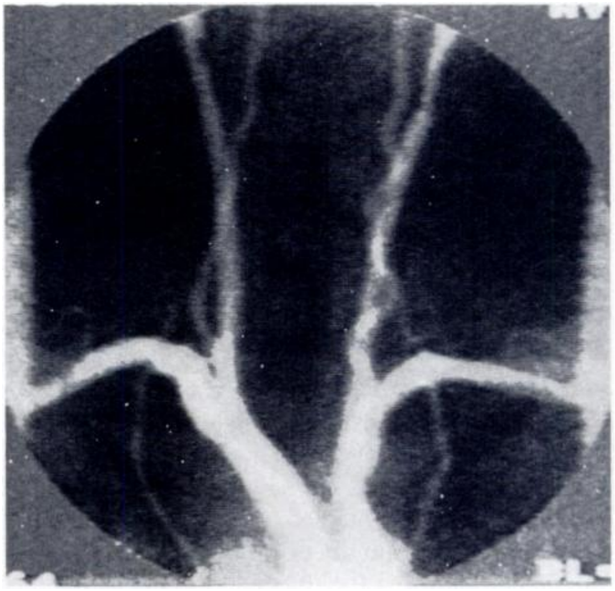

Figure 6. This digital subtraction angiogram of the aortic arch and carotid arteries was obtained by the intravenous injection of 30 ml of Vascoray. The vertebral and internal mammary arteries are visualized as well as bilateral stenoses of the carotid arteries at the superior border of the picture.

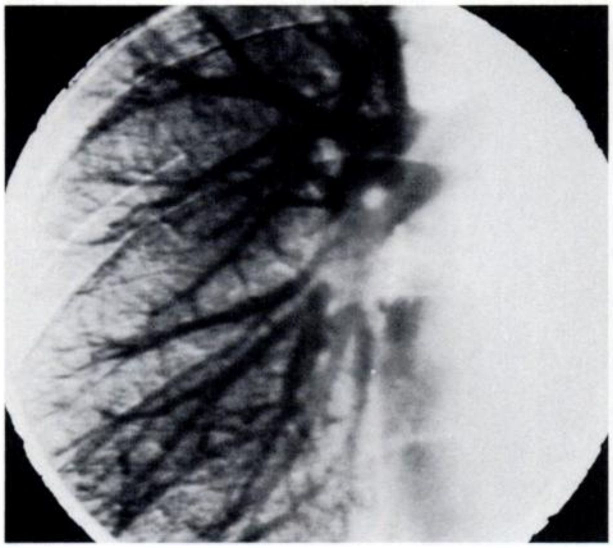

FIGURE 7. This digital subtraction pulmonary angiogram was obtained after the intravenous administration of 30 ml of contrast material.

obtain an invasive pulmonary angiogram for a definitive diagnosis. Many clinicians are reluctant to order a pulmonary angiogram because of its potential adverse effects. Preliminary results suggest that digital subtraction techniques now permit pulmonary angiograms of good quality to be obtained with intravenous injection of contrast medium (Fig 7). These early studies suggest good correlation between intravenous digital pulmonary angiograms and standard cut film pulmonary angiography. Third and fourth order pulmonary artery branches are visualized during the intravenous study. As with other clinical applications of digital subtraction angiography, the major drawback of this technique is misregistration artifact caused by a dyspneic patient's breathing. Moreover, oblique views are difficult because of inadequate x-ray penetration and artery overlapping. Studies are currently underway to correlate the sensitivity and specificity of digital subtraction angiography versus V/Q scans as compared to standard pulmonary angiography.

In addition to intravenous administration of contrast material, digital subtraction angiography also permits intraarterial injection of less contrast material compared to a standard angiogram. For example, a 5 to 15 ml dose of contrast medium may be sufficient for an aortic arch study or a femoral arteriogram. Although this still entails an arterial puncture, the amount of contrast material is one fourth the standard dose and is much better tolerated. An example of an aortic and renal arteriogram obtained with 5 ml of contrast medium injected into the descending aorta is demonstrated in Figure 8. The ability to use lesser amounts of contrast material may be beneficial in patients with impaired renal or cardiac function who may not tolerate large doses of the hyperosmolar contrast agents. Moreover, many patients with coronary artery disease are older, and therefore, are likely to have significant carotid artery disease. The ability to perform an aortic arch study in these patients at the end of a cardiac catheterization study with small amounts of dye often eliminates the need to perform a second invasive aortic arch study.

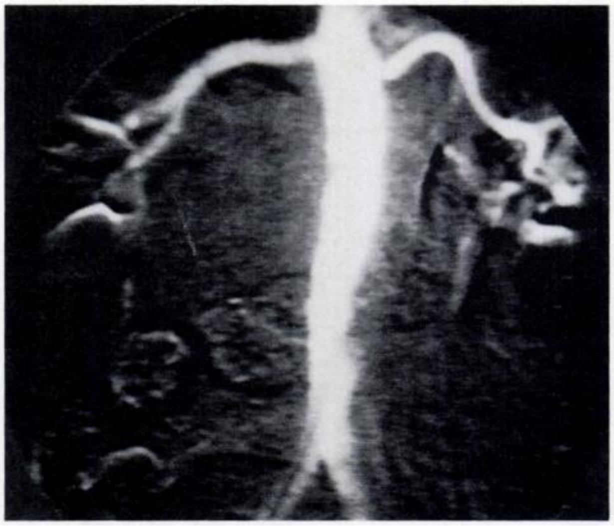

FIGURE 8. This digital subtraction angiogram of the abdominal aorta and renal arteries was obtained with an intraaortic injection of 5 ml of contrast material. An early aneurysmal formation of the distal aorta can be visualized just above the common iliac bifurcation.

CARDIAC APPLICATIONS

One might suspect that it would be more difficult to image the heart during mask mode subtraction because the cardiac chambers move vigorously during each cardiac cycle. However, experience has shown that this problem of cardiac motion artifact can be minimized by using a 16 frame or one-half second fluoroscopic exposure of the thorax and summing these 16 separate images into one mask. The one-half second summed mask gives an average representation of the background fluoroscopic signals from the heart and great vessels before the injection of contrast media, and thus, by producing a 16 frame blurred mask, the problem of cardiac motion is greatly reduced.

Because of the ability to enhance images by digital subtraction techniques, it is possible to image dye in the heart at much lower concentrations. This leads to several clinical applications. One series of applications relates to the ability to use digital subtraction angiography to perform first pass right and left ventriculograms following the intravenous administration of 20 to 30 ml of contrast medium (Fig 9). Correlative studies have shown that intravenous digital angiograms yield similar values for left ventricular volumes and ejection fraction compared with standard intraventricular cineangiography.[15] In one series of 30 patients, the end-diastolic volumes calculated from the standard cineangiograms were related to volumes calculated from the digital intravenous angiograms by the equation DIGITAL

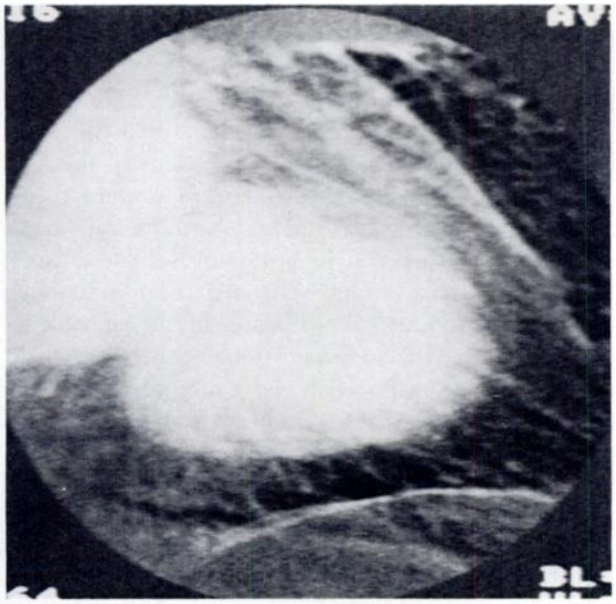

FIGURE 9. This first pass digital subtraction left ventriculogram was obtained in the 30° RAO position after injecting 30 ml of Vascoray into the femoral vein. In the first pass technique, the boundaries of the mitral and aortic valves may be difficult to delineate but can be more readily appreciated by observing the study in real time.

END-DIASTOLIC VOLUME = (0.99) (CINE END-DIASTOLIC VOLUME) + 0.6 ml.[16] These volumes were closely correlated with $r = 0.82$. End systolic volumes were closely correlated ($r = 0.93$) and related by the equation DIGITAL END-SYSTOLIC VOLUME = (1.0) (CINE END-SYSTOLIC VOLUME) − 1.7 ml. Ejection fractions calculated from the two techniques showed the closest correlation ($r = 0.96$) and were related by the regression equation DIGITAL EJECTION FRACTION = (0.92) (CINE EJECTION FRACTION) + 4.9 (Fig 10).

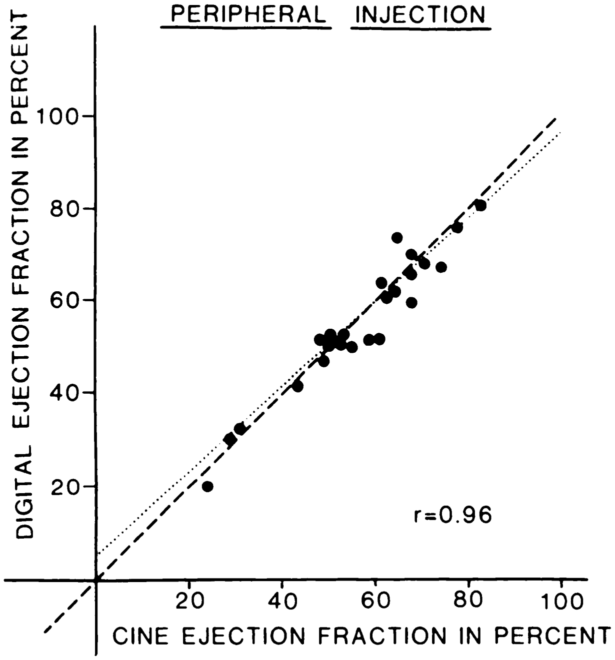

FIGURE 10. Comparison of left ventricular ejection fraction obtained by intravenous digital angiography (vertical axis) and intraventricular cineangiography (horizontal axis). The line of identity is shown as the *heavy dashed line* and the regression equation is represented by the *dotted line.*

During these studies, it was found that six (20 percent) patients developed ventricular tachycardia during the intracardiac power injection of contrast medium, whereas no patient developed premature ventricular contractions during the intravenous studies. Thus, one advantage of the intravenous method is the elimination of premature ventricular contractions as a cause of technically poor ventriculographic studies. Another finding of this study was that while seven of the intravenous digital studies were initially difficult to evaluate because of poor image quality, all seven were improved sufficiently by postprocessing the image to permit adequate visualization and quantitation. During postprocessing, the ventricular image which is stored on videotape, is played back through the image processing computer and selected frames are redigitized. The white scale contrast and background gray levels can then be manipulated to improve visualization of the ventricular boundaries. It also was noted that first pass digital left ventriculograms are difficult to obtain in patients with low cardiac output because the bolus of contrast medium becomes diluted during the slow transit time. In addition, patients with tricuspid insufficiency are also difficult to study because the contrast medium is diluted as it washes back and forth between the right ventricle and right atrium. On the other hand, an occasional patient will have a better left ventriculogram performed by the intravenous digital technique than with standard cineangiography because of better mixing of contrast with the intravenous approach. An example of a patient whose intracardiac injection during standard cineangiography did not adequately fill the left ventricle is demonstrated in Figure 11.

In addition to intravenous first pass ventriculography, digital subtraction angiography can also be used effectively during conventional cardiac catheterization. Left ventriculograms can be obtained with 5 to 10 ml of contrast material injected directly into the left ventricle.[17] These low dose ventriculograms correlate closely with standard 40 ml cineangiograms in regard to ventricular volumes and ejection fraction. In one study, low dose ventriculograms had no significant effect on cardiac hemodynamics whereas the 40 ml injection raised the mean left ventricular end-diastolic pressure by an average of 6 mm Hg (Fig 5).[18]

Because digital subtraction makes low dose ventriculograms feasible, it is possible to obtain multiple left ventriculograms during cardiac catheterization without increasing the total dose of contrast medium or radiation exposure compared to standard angiography. This capability permits interventional studies to be performed in the catheterization laboratory to assess

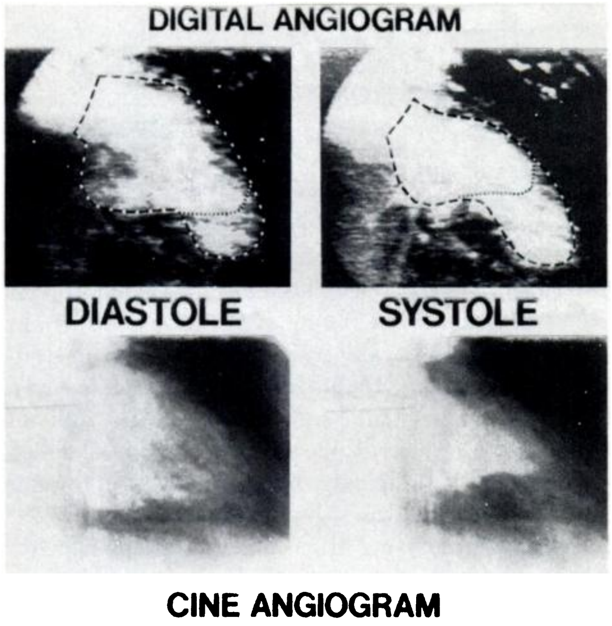

FIGURE 11. Intravenous digital angiograms *(upper)* and intraventricular cineangiograms *(lower)* from the same patient. Both studies were performed with 40 ml of contrast material. The intravenous technique provided better mixing of contrast and allowed the apical aneurysm to be better visualized. The left ventricular boundaries that were appreciated on the standard intraventricular cineangiograms have been superimposed on the digital angiogram and outlined with small dots while the boundaries appreciated on the digital angiogram have been outlined by the heavy dashed lines.

ventricular function. In one study, left ventriculograms were performed in a series of 21 patients at rest and during atrial pacing. Patients were paced until they either developed chest pain or attained 85 percent of their maximum predicted heart rate.[19] Fourteen of the 15 patients with coronary artery disease had a decrease or no change in the ejection fraction, whereas five of six patients with normal coronary arteries had at least a 5 percent increase in ejection fraction. Left ventriculograms were performed in the 30° RAO position so wall motion abnormalities in the anterior or inferior walls could be correlated with coronary lesions in the left anterior descending or right coronary artery. Since digital ventriculograms have ten times the resolution capability compared to radionuclide angiography, wall motion abnormalities are very well visualized with digital angiography. Thus, pacing studies may prove very useful clinically because they allow the functional hemodynamic significance of a specific coronary lesion to be evaluated. This information may assist decisions concerning the necessity for coronary bypass surgery.

VIDEODENSITOMETRY

A significant advantage of digital angiography compared to traditional film-based angiography is the ability to quantitate the relative amount of iodine present in a volume of blood. This ability to determine the density of contrast medium in electronic images is termed videodensitometry. In order to perform videodensitometry, the fluoroscopic image of the contrast-filled heart must be logarithmically amplified to correct for nonlinear x-ray absorption and thereby produce a linear proportionality between iodine density and the depth of the iodine signal that the x-ray beam traversed. Because the x-ray density in each portion of the image is converted into a number, these quantitative data can be used to determine the iodine densities in each pixel. In order to evaluate a large structure, such as the left ventricle, these individual densities are summed over the area of the ventricle to yield a number which is proportional to the ventricular volume.[20] This analysis can be computerized using software similar to that used in radionuclide imaging. In one series of 25 patients, ejection fraction obtained by videodensitometry correlated well with the standard area-length method using visual border detection ($r = 0.88$).[21] As with radionuclide techniques, videodensitometry during iodine contrast injections is not dependent upon geometric assumptions of the shape of the left ventricle.

The combination of digital subtraction angiography and videodensitometry may also prove to be very useful as a method for assessing myocardial perfusion. Coronary angiograms obtained during standard intracoronary injection of contrast material can be processed by digital subtraction (Fig 12). By imaging the capillary blush phase during intracoronary angiography and by analyzing the digital image with videodensitometry, one can derive a relative volume of blood in specific regions of the myocardium. This may prove particularly useful in patients with coronary artery disease. The ability to perform myocardial perfusion

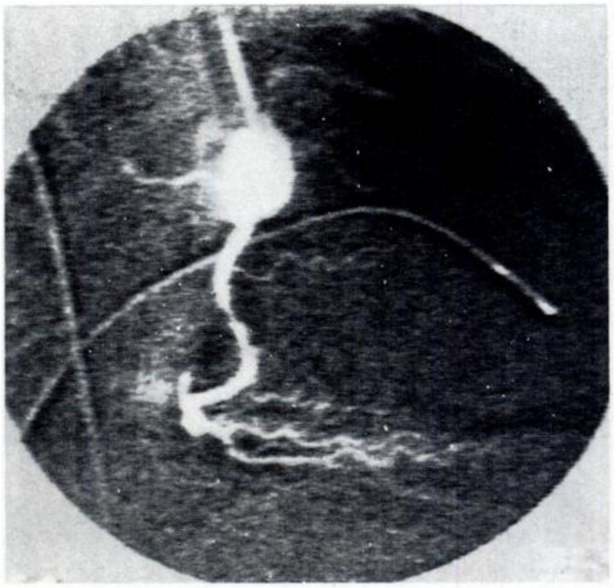

FIGURE 12. Digital subtraction angiogram of a right coronary artery in the 30° RAO position following direct intracoronary injection of 4 ml of Renografin 76. The stop frame image from the television monitor reveals a 75 percent stenosis of the mid-right coronary artery.

studies without the use of radioactive tracers may well prove to be of significant benefit in assessing patients with coronary artery disease.

Since the digital image processing computer and recorder are relatively small, they can be set into a portable frame for easy transport of the equipment. Portable x-ray C-arms are being developed to perform digital angiography. These adaptations will permit intravenous digital angiograms to be obtained in the intensive care unit setting. We have begun to study the applications of bedside angiography for assessing left ventricular function and for determining the presence of pulmonary emboli. In collaboration with Edwards Laboratories, we are developing a new catheter to permit continuous hemodynamic monitoring which is also adapted for pulmonary artery administration of contrast material. Thus, left ventricular wall motion can be assessed in critically-ill patients in the intensive care unit using a first pass digital angiographic technique.

Digital subtraction angiography is an exciting new modality that promises to have multiple applications for diagnosis of cardiovascular disorders. Although still in a very early stage of development, this technology already is proving to be a less invasive means of imaging the cardiovascular system. Alternatively, during standard invasive cardiac or peripheral angiography, digital subtraction is being used to decrease the total amount of contrast medium which, in turn, permits interventional studies to be performed to assess cardiac function. In addition, the computer technology allows special processing, such as videodensitometry, to be used to assess myocardial perfusion and ventricular volumes. This new technology is a dramatic example of the capacity of computers to alter medical diagnostic technique and is a direct result of the impressive advances in computer design over the past 15 years. As computer technology continues its rapid development, digital angiography likely will have an even greater impact on the way cardiovascular diagnosis is performed.

ACKNOWLEDGMENT: Figures 3 and 4 are reprinted with permission of Raven Press from *Cardiovasc Med* 1; 1982. Figures 5, 10 and 11 are reprinted with permission from the American Heart Journal. The authors wish to express their appreciation for the excellent technical assistance of Ellen Mansour, Carol DeBoer, R.N., Eunice Henderson, LVN, Marypaull Quick, CRT, and Pat Hall, CPT. We also thank Mr. Thomas Thom of the National Institutes of Health.

REFERENCES

1 Detailed diagnoses and surgical procedures for patients discharged from short stay hospitals: US-1979 Hyattsville, MD: National Center for Health Statistics, DHHS Pub (PHS) 82-1274-1 1982

2 Ergun DL, Mistretta CA, Kruger RA, Riederer SJ, Shaw CG, Carbone DP. A hybrid computerized fluoroscopy technique for noninvasive cardiovascular imaging. Radiology 1979; 132:739-42

3 Kruger RA, Mistretta CA, Houk TL, Kubal W, Riederer SJ, Ergun DL, et al. Computerized fluoroscopy techniques for intravenous study of cardiac chamber dynamics. Invest Radiol 1979; 14:279-87

4 Houk TL, Kruger RA, Mistretta CA, Riederer SJ, Shaw CG, Lancaster JC, et al. Real-time digital K-edge subtraction fluoroscopy. Invest Radiol 1979; 14:270-78

5 Kruger RA, Mistretta CA, Houk TL, Riederer SJ, Shaw CG, Goodsitt MM, et al. Computerized fluoroscopy in real time for noninvasive visualization of the cardiovascular system. Radiology 1979; 130:49-57

6 Crummy AB, Strother CM, Sackett JF, Ergun DL, Shaw CG, Krueger RA, et al. Computerized fluoroscopy: digital subtraction for intravenous angiocardiography and arteriography. Am J Radiol 1980; 135:1131-40

7 Mistretta CA, Crummy AB. Diagnosis of cardiovascular disease by digital subtraction angiography. Science 1981; 214:761-65

8 Frost MM, Nudelman S, Ovitt TW, Roehrig H, Capp MP, Fisher H, et al. Digital acquisition system for photo-electronic radiology—a performace overview. SPIE 1980; 233:54-60

9 Christenson PC, Ovitt TW, Fisher HD, Frost MM, Nudelman S, Roehrig H. Intravenous angiography using digital video subtraction: intravenous cervicocerebrovascular angiography. Am J Radiol 1980; 135:1145-52

10 Brennecke R, Braun TK, Bursch JH, Heintzen PH. Digital processing of videoangiographic image series using a mini computer. In: Proceedings of computers in cardiology. IEEE Computer Society, 1976:255

11 Heintzen PH, Brennecke R, Bursch JH. Digital cardiovascular radiology: medical motivations and technical developments. In: Lindberg DAB, Reichetz PL, eds. Lecture notes in medical informatics, digital image processing in medicine proceedings. Berlin: Springer-Verlag, 1981:1-14

12 Seibert JA, Nalcioglu O, Roeck WW. A deconvolution technique for the improvement of contrast of image intensifiers. SPIE 1981; 314:310

13 Henry WL, Crouse L, Stenson RE, Harrison DC. Computer analysis of cardiac catheterization data. Am J Cardiol 1968; 22:696

14 Meaney TF, Weinstein MA, Buonocore E, Pavlicek W, Borkowski GP, Gallagher JH, et al. Digital subtraction angiography of the human cardiovascular system. Am J Radiol 1980; 135:1153-60

15 Vas R, Diamond GA, Forrester JS, Whiting JS, Swan HJC. Computer enhancement of direct and venous-injected left ventricular contrast angiography. Am Heart J 1981; 4:719-28

16 Tobis JM, Nalcioglu O, Johnston WD, Seibert A, Iseri LT, Roeck W, et al. Left ventricular imaging with digital subtraction angiography using intravenous injection and fluoroscopic exposure levels. Am Heart J 1982; 104:20-27

17 Sasayama S, Nonogi H, Kawai C, Fujita M, Eiho S, Kuwahara M. Automated method for left ventricular volume measurement by cineventriculography with minimal doses of contrast medium. Am J Cardiol 1981; 48:746-52

18 Tobis JM, Nalcioglu O, Johnston WD, Seibert A, Roeck W, Iseri LT, et al. Correlation of 10 milliliter digital subtraction ventriculograms compared with standard cineangiograms. Am Heart J, accepted for publication

19 Tobis JM, Nalcioglu O, Johnston WD, Seibert A, Iseri LT, Roeck W, et al. Use of digital angiography in assessment of ventricular function and wall motion during pacing in patients with coronary artery disease. Am J Cardiol, accepted for publication

20 Nalcioglu O, Roeck WW, Pearce JG, Gillian GD, Milne ENC. Quantitative fluoroscopy. IEEE Trans Nucl Sci 1981; 28:1

21 Nalcioglu O, Seibert JA, Roeck WW, Henry WL, Tobis JM, Johnston WD. Comparison of digital subtraction video densitometry and area length method in the determination of left ventricular ejection fraction. SPIE 1981; 314:294-98