Title
Magnetometer Survey of the La Venta Pyramid and Other Papers on Mexican Archaeology

Authors
Morrison, Frank
Clewloe, C. W., Jr.
Heizer, Robert F.
et al.

Publication Date
1970-06-01

CONTRIBUTIONS
OF THE
UNIVERSITY OF CALIFORNIA
ARCHAEOLOGICAL RESEARCH FACILITY

Number 8 **June, 1970**

MAGNETOMETER SURVEY OF THE LA VENTA PYRAMID AND OTHER PAPERS ON MEXICAN ARCHAEOLOGY

UNIVERSITY OF CALIFORNIA
DEPARTMENT OF ANTHROPOLOGY
BERKELEY, CALIFORNIA

CONTRIBUTIONS OF THE
UNIVERSITY OF CALIFORNIA
ARCHAEOLOGICAL RESEARCH FACILITY

Number 8 June 1970

MAGNETOMETER SURVEY OF THE LA VENTA PYRAMID AND OTHER PAPERS ON MEXICAN ARCHAEOLOGY

UNIVERSITY OF CALIFORNIA ARCHAEOLOGICAL RESEARCH FACILITY
Department of Anthropology
Berkeley

Copies of this report can be ordered from the
Archaeological Research Facility, Department
of Anthropology, University of California,
Berkeley, California 94720.

Price, $2.00 (California residents add 5% sales tax).

CONTENTS

ACKNOWLEDGEMENTS

Costs of the magnetometer survey of the La Venta pyramid were supported by a grant from the National Geographic Society. This publication of the report on the magnetometer survey has been made possible through a special grant from the Committee for Research and Exploration of the National Geographic Society. The Society also arranged for the printing of the colored magnetic map which appears here as Figure 6.

In connection with the La Venta pyramid project the authors also wish to acknowledge the assistance of Mr. Jose Benavente, graduate student in the Department of Materials Science and Engineering, who developed the special purpose computer programs for the interpretation models in this study. We are also indebted to Dr. J. Barcus, Physics Department, University of Denver, who very graciously and generously permitted us to borrow his rubidium sensor for this investigation. We acknowledge with thanks the assistance of the University's Computer Center (Berkeley) in providing the computer time and plotting for the interpretation. Mr. Eugene Prince, photographer in the Lowie Museum of Anthropology took the color photo from which Figure 6 is printed.

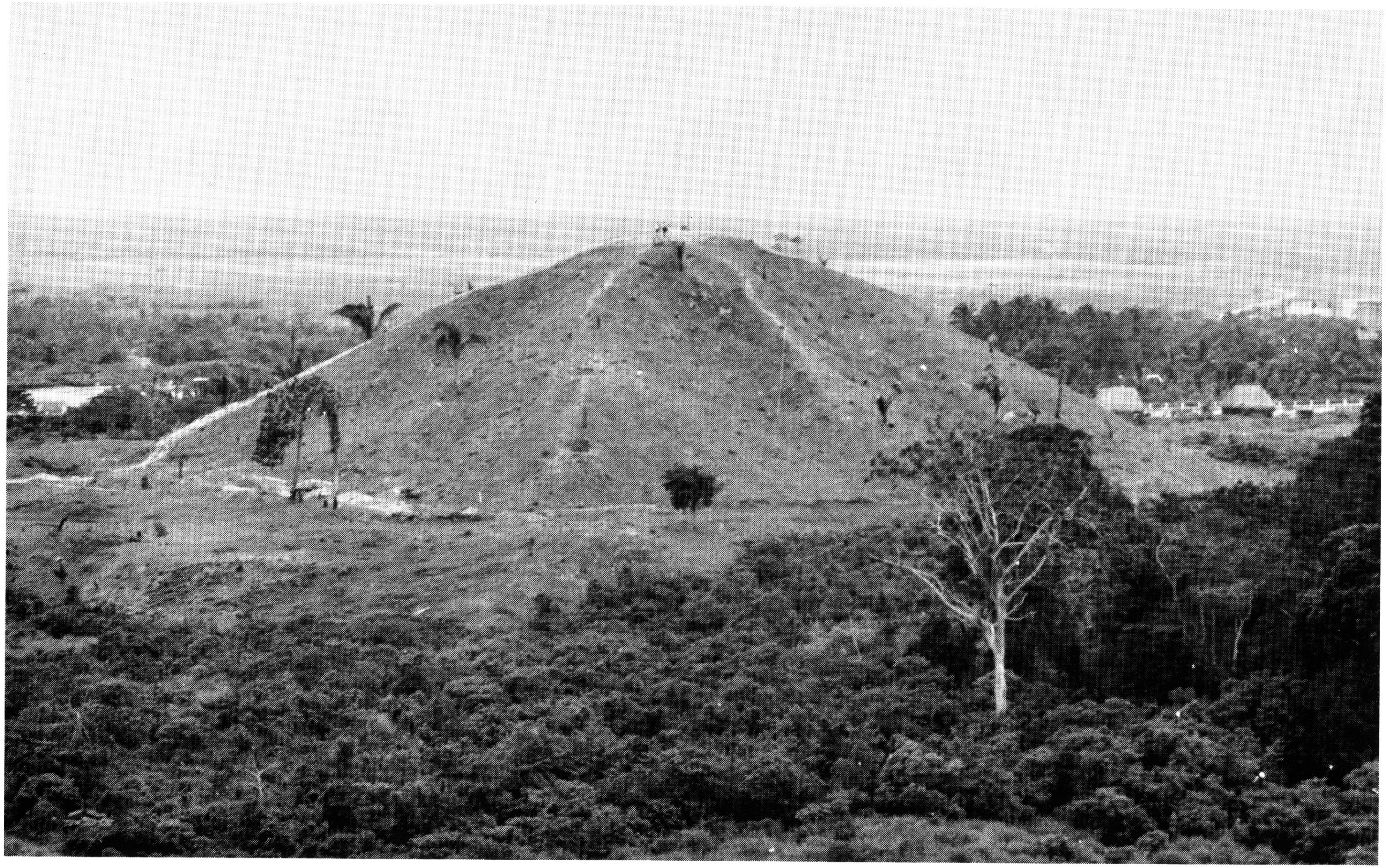

THE LA VENTA PYRAMID (FEBRUARY, 1968) LOOKING NNW

I. MAGNETOMETER SURVEY OF THE LA VENTA PYRAMID, 1969

Frank Morrison, C. W. Clewlow, Jr. and Robert F. Heizer

Introduction

The La Venta pyramid, although the largest single structure at the important Olmec ceremonial center in lowland Tabasco, has until recently been afforded scant attention by researchers at the site. Early investigations there by Matthew Stirling and Philip Drucker were concentrated on the unique art style embodied in the large carved stone monuments and the problems of ceramic stratigraphy (cf. Stirling, 1943; Drucker, 1952). The large scale explorations of Drucker and Heizer in 1955 explored the complexities of Complex A (Drucker, Heizer, and Squier, 1959; Drucker and Heizer, 1965). Although the northern two-thirds of the site was mapped in 1955, the pyramid (referred to as Complex C) was covered with a dense growth of jungle cover and was incorrectly shown by the party surveyor to be a somewhat elongated rectangle.

It was with understandable surprise, then, that Drucker and Heizer viewed the pyramid in 1967, stripped of its heavy cover of foliage, and recognized that it was not rectangular at all, but was actually a fluted cone or, more technically, a conoidal frustum (Heizer and Drucker, 1968; Heizer, 1968). Ten alternating valleys and ridges were seen to run up the sloping surface of the structure's 100 foot elevation, spaced at roughly equal intervals around its circular basal plan. In 1968 Heizer returned to La Venta with a University of California field party and, among other things, completed a detailed topographic map, shown here in Figure 4, of the entire pyramid structure which constitutes Complex C (Heizer, Drucker, and Graham, 1968; Heizer, Graham, and Napton, 1968).

This entirely new information, as well as providing fresh insights into Olmec culture history (cf. Ibid., p. 137; Heizer, 1968, pp. 12-21), has generated a renewed interest in the unique structure itself (Bernal, 1969, pp. 35-36). Much of this interest of course revolves around the problems of the possible function of the mound and the possibilities that it might contain smaller buried structures. It was in hopes of providing partial answers to these questions that the 1969 magnetometer survey was conceived. It was known that most of the large Olmec carved monuments as well as the natural basalt columns which were used in the enclosure and the "tomb" in Complex A were of a highly magnetic basalt from the Tuxtla Mountains, some 70 kilometers to the west (Williams and Heizer, 1965). Samples of clays from the site constructions were tested and found to be effectively non-magnetic. Thus it was felt that should the Olmecs have buried any large stone monuments or built any structures of basalt within the pyramid they would be detected by a sensitive magnetometer (cf. Stuart and Stuart, 1969, p. 200).

Most of the groundwork for the survey was done in Berkeley by Heizer, who was unable to accompany the field party. The National Geographic Society through its Committee on Research and Exploration granted funds for the magnetometer survey. The authors wish to thank Dr. Melvin Payne, President of the NGS and Dr. Leonard Carmichael, Secretary of the Committee on Research and Exploration and the several members of the Committee for their support. The field party itself was led by F. Morrison of the Department of Materials Science and Engineering, University of California, Berkeley. He was aided by Jack Mego, an electronics technician in the same department, and by C. W. Clewlow, a graduate student in Anthropology. Invaluable assistance in Mexico City, in Villahermosa, and at the La Venta site itself was provided by Arql. Eduardo Contreras, Jr. of INAH, and Arql. Carlos Sebastian Hernandez, Conservador of the Museo del Estado, Villahermosa, Tabasco. Considerable enthusiasm and support from the Instituto Nacional de Antropologia e Historia through the Director, Dr. Ignacio Bernal, contributed immensely to the success of the survey. The survey itself took place between May 11 and May 29, 1969.

Description of the Magnetometer

Calculations of the magnetic anomalies to be expected from significant basalt monuments buried within the La Venta pyramid were carried out on the computer at Berkeley prior to the field work. Samples of sand and clay from 1968 test excavations in the La Venta area were tested for magnetic susceptibility and found to be essentially non-magnetic. Assuming that the pyramid itself was constructed of similar materials, and consequently possessing no magnetic anomaly of its own, models consisting of basalt cubes three meters on a side were run on the computer and values of the anomalous magnetic field to be expected on the surface of an idealized model of the pyramid were obtained. These calculations indicated that to detect such a basalt structure, at the center and base of the pyramid, sensitivities as high as 0.05 gammas (γ) would be required (the Earth's total magnetic field at La Venta is approximately 43,000 γ). These same calculations showed that a station spacing of three meters would be adequate to detect any major structures.

Since natural time variations with periods from 1 second to diurnal are a characteristic of the Earth's magnetic field and because these time varying fields can have amplitudes from 0.01γ to 100γ (respectively) it is necessary to have a means of correcting for, or eliminating, these variations in order to conduct such a high sensitivity magnetometer survey. The time varying magnetic field is uniform over distances measured in kilometers so that an obvious solution for small area surveys is to use two magnetometers and measure the difference in the field. In this way, if one magnetometer is placed in a fixed position the roving magnetometer will map the field due to subsurface effects independently of the time variations. This configuration was selected for the La Venta survey.

An alternate procedure which is often used in conventional geophysical prospecting is to use only one sensor and to return periodically to a fixed point, correcting the intervening readings in proportion to the amount the field at the fixed point has varied. This method is inappropriate if sensitivities of 1.0γ or less are required because it would be necessary to reoccupy the fixed station every 15 to 20 seconds.

The two-sensor difference magnetometer is useful for high sensitivity surveys only if each sensor is itself of high sensitivity and consequently such surveys have been possible only since the development of the alkali vapour magnetometer. These devices have limiting sensitivities of 0.001γ and operating sensitivities of 0.01γ are easy to achieve. The first two-sensor difference survey, using Varian rubidium vapour magnetometers, was conducted in 1965 (Breiner, 1965, Rainey and Ralph, 1966), and in the summer of 1966 two fully developed systems were used with great success in the search for Sybaris (Ralph, Morrison and O'Brien, 1968). A more complete description of the operation of the alkali vapour magnetometers may be found in the articles referenced above.

To describe the actual electronics associated with the measurement of the fields, it is only necessary to note that the output from an alkali vapour magnetometer is a frequency proportional to the magnetic field in which the sensor is placed. In the case of the rubidium sensor, the constant of proportionality is 4.667 cycles per second per gamma (Hz/ γ). Thus in a field of 40,000γ the frequency output of the magnetometer would be 186,680 Hz. For cesium the constant is 3.499 Hz/γ. These output frequencies are easily measured on standard electronic counters (devices to measure the number of cycles in a prescribed time). We can now easily determine the sensitivity of a single magnetometer; for rubidium a change of 1γ in the field changes the frequency by 4.667 Hz. If the counter displays the integer number of cycles in one second, we have a sensitivity of ±1 cycle/second or approximately 1/4.667γ. If we count for 10 seconds, we then have a sensitivity of 0.1 cycle/second or approximately 1/46.67γ.

Ideally in difference operation we would use a counter that measured the difference in two output frequencies. The Varian portable magnetometer readout unit accomplished this, but a simple and less expensive alternate approach is to use the configuration of Figure 1. This particular difference magnetometer used two different Varian sensors, one rubidium and one cesium. This was dictated solely by availability of sensors and in no way affects the theory of operation.

The entire magnetometer system was powered by a lightweight 350 watt gasoline motor-generator. Battery operation is also possible, but the weight of the batteries required for 8 hours of operation is as great as the generator plus gasoline. Moreover most electronic counters, especially those available on a rental basis, are 110v ac and would require an inverter for battery operation. This would simply replace the converter used in this system to supply the dc power to the sensors. The couplers associated with each sensor in Figure 1 are mixers that supply the regulated 28v dc power to the sensor and extract the output signal frequency returned from the sensor to be fed to the counter. In the Varian readout unit the two couplers, the power supply, and the counter are combined in a single unit powered by a battery pack.

We shall see below that it is not necessary to use a counter that actually measures the difference of the two sensor outputs. In fact, for "small" differences in magnetic field between the two sensors the ratio of the two frequency outputs is linearly proportional to the difference. This allows us to use any counter which can measure ratios. The Hewlett-Packard Model 5325Awas selected for this survey for its light weight, low power consumption and low monthly rental.

Magnetometer Sensitivity

To show the relationship of ratio to difference for this magnetometer and to determine the difference mode sensitivity for the La Venta survey, the following calculations are included in this report.

Let the output frequency of the rubidium magnetometer be A Hz at a fixed point. At the same point the output of the cesium magnetometer will be B Hz. If the Earth's field at that point is $T\gamma$, then $A = 4.667T$ and $B = 3.499T$. The ratio A/B is 1.333809. [A more correct ratio, using more significant digits is 1.333400. This value thus constitutes the zero contour in this survey.]

Now, disregarding time variations for the moment, if the cesium magnetometer is moved to a position where the field has increased a small amount, δ , then the frequency output will increase $\delta \times 3.499$ or Δ . The ratio is now $A/(B+\Delta)$ or $A/B(1+\frac{\Delta}{B})$. Now if $\Delta/B << 1$, $(1 + \Delta/B)^{-1}$ may be expanded as $1 - \Delta/B + \Delta^2/B^2 - \ldots$. If Δ/B is less than .001, then neglecting the terms beyond Δ/B in the series will affect the value of $(1 - \Delta/B)^{-1}$ by less than one part in 10^6. In that case the ratio becomes

$$\frac{A}{B} \left(1 - \frac{\Delta}{B}\right)$$

or

$$\frac{A}{B} - \frac{A}{B^2} \cdot \Delta$$

Thus, the ratio is a linear function of Δ.

We may now apply numbers from the La Venta survey. The mean value for A at La Venta was 202,700 Hz or 43,432.6γ. Thus the value of B is 202,700 × 3.499/4.667 or 151,970 so that A/B^2 becomes 8.77×10^{-6}. If the field at sensor B now increases by $\delta\gamma$'s, then $\Delta = 3.499\delta$ and the ratio becomes

$$\frac{A}{B} - 8.77 \times 10^{-6} \times 3.499\delta$$

or $1.333808 - 30.686 \times 10^{-6}$.

To translate this into limiting sensitivities, if we can measure the ratio to ± 1 unit in the sixth decimal place then the difference sensitivity is $1/30.6\overline{86}$ or $.0325\gamma$/ unit. For six decimal ratio accuracy the count time was 1 second with the corresponding sensitivity of 0.325γ . The entire survey at La Venta was conducted with a sensitivity of ± 0.0325γ. In retrospect, we will see below an order of magnitude less would have been satisfactory.

For this linear relationship between ratio and difference to hold it is only required that Δ/B be less than .001, ie., $3.499\delta/151{,}970$ be less than .001 or that δ be less than 43γ approximately. Rarely do anomalies in excess of 100γ occur in archaeological prospecting so it is seen that the magnetometer used here is, to a very high order, a true difference magnetometer. Practically speaking, if the anomaly is greater than 43γ a sensitivity of ± 1 in the sixth decimal place of the ratio is unnecessary. With a relaxing of the sensitivity to ± 1 in the fifth place, the linear approximation is again valid for anomalies up to several hundred gammas.

There remains the proof that the time variations are in fact cancelled in such a configuration. We will consider the two outputs as before except that now the field increases by δ γ's at each of them. The ratio then becomes

$$\frac{A + 4.667\delta}{B + 3.499\delta} \quad \text{or for convenience} \quad \frac{A + C_A\delta}{B + C_B\delta}$$

Note that $C_B/C_A = r$ a fixed constant. We may now write the ratio as

$$\frac{A\left[1 + \frac{C_A\delta}{A} \right]}{B\left[1 + \frac{C_B\delta}{B} \right]}$$

Again, if $C_B\delta/B$ is $<<1$, we may write this ratio as

$$\frac{A}{B}\left(1 + \frac{C_A\delta}{A}\right)\left(1 - \frac{C_B\delta}{B}\right)$$

$$= \frac{A}{B}\left(1 - \frac{C_B\delta}{B} + \frac{C_A\delta}{A} - \frac{C_AC_B\delta^2}{AB}\right)$$

Now

$$\frac{C_B}{B} = \frac{C_A}{A} = \frac{1}{T} \quad \text{so the two middle terms cancel leaving}$$

$$\frac{A}{B}\left(1 - \frac{\delta^2}{T^2}\right)$$

Here again we find that the restriction required to keep the ratio constant to 1 part in 10^6 is that δ^2/T^2 must be less than 10^{-6} approximately. At La Venta T is 43,000γ so δ must be less than 43γ .

Thus we find that for time variations to have no effect on the sixth decimal place of the ratio, the magnitude of the variation must be less than 43 γ. Since the normal short period variations that we are trying to eliminate are rarely greater than 10, we see that for all practical purposes the time variations will have no effect on the ratio. If variations greater than 43γ do occur, they may be corrected for by monitoring the total field of the fixed sensor. Readings of total field frequency were recorded at half hour intervals during the survey to ensure that the amplitude did not change greatly. Maximum changes of less than 20γ were common to all the data recording periods.

As indicated in Figure 1, the rubidium sensor was used as the fixed sensor and the cesium as the roving or mobile sensor. The technical reason for this choice is that the cesium sensor is less subject to orientation error and consequently easier to use as a hand carried device. It should be noted that the output frequency is independent of the orientation of the cell but that the signal-to-noise ratio is highest when the sensor axis is at 45° to the total-field direction and decreases away from this position--the decrease being less for cesium than for rubidium.

A final point is that this magnetometer provides an absolute zero for a particular area which is of some help in the interpretation of the data.

Field Operation at La Venta

The equipment involved in the La Venta survey, schematically described in Figure 1, is shown packaged in Plate 1. In operation the fixed sensor was placed well away from the readout area and both it and the roving sensor were connected by coaxial cable to the readout unit. The fixed sensor and the roving sensor are shown together in Plate 2. The readout unit consisting of the two couplers, the power supply, and the counter is shown in Plates 3 and 4.

To facilitate carrying the roving sensor dragging its cable along with it, it was necessary to clear the pyramid of the dense underbrush (see Plate 5). Survey lines were then laid out radially using ordinary cord marked off in 3 meter intervals. Readings were taken each 3 meters out one line (Plate 7), the line was then swung approximately 6 meters in chord distance at the 60 meter radius and surveyed again. Intermediate values, between lines, at large radii were filled in by estimating position.

Azimuth readings were taken periodically and topographic features were noted on the survey lines so that the data could later be fitted accurately to the plan map of the pyramid. This surveying technique was rather crude but relative positioning error is less than one meter and the maximum absolute error is less than 2 meters in the azimuthal direction and less than I meter in the radial direction. More accurate surveying procedures would have increased the survey time unreasonably without significant improvement in the overall data.

The ratio values at each station were recorded directly on radially scaled graph paper, an example of which is shown in Figure 2. This allowed preliminary contouring of data in the field as the example indicates. Note that the ratio values are inverted with respect to the true magnetic anomalies; that is, ratio lows correspond to magnetic highs and vice versa.

To facilitate steady positioning of the roving sensor on the often uneven surface of the pyramid the operator was "lowered" down the pyramid by a rope as shown in Plate 6. The process was found to be considerably easier on the sensor operator, inasmuch as scrambling up and down a 30° slope in high temperature and humidity can be rather wearying. The sensor was carried at a mean height of .8 meters above the ground.

All the equipment performed excellently. In the peak of the mid-day heat, the heater control unit in the rubidium sensor failed but this problem was easily eliminated by removing the unit. Apparently the high ambient temperature was sufficient to keep the cesium cell vaporized. The survey was completed in 8 days, and the equipment was actually on for a total of 41 hours. The progress of the survey was impeded in the early days by the fact that the pyramid could not be cleared fast enough by a work crew of eight men. The number was eventually increased to 24 and the survey progressed more rapidly. Further, due to encroaching houses with their associated debris, garden plots, etc., it was not possible to extend the survey radially as far as had been planned. This was extremely unfortunate because on most lines it was not possible to survey far enough away from the pyramid to get a zero or background reading, nor was it possible to search for any monuments, structures, etc., that might be near the base. Approximately 2500 data points were obtained.

Data Processing

The field data were transferred to a large scale plan map of the pyramid and replotted. The ratio 1.334000 was chosen as the base for this plot and subtracted from all the readings. The readings were then contoured in levels of 100 units or 3.25γ. An ink tracing of the resulting contour map was then made with the contours now marked in (3.00γ was assumed instead of the correct 3.25) and with the correct sign. This map was then photo-reduced to the same scale as the topographic map of the pyramid. This final contoured magnetic map is shown in Figure 3. The topographic map is shown in Figure 4. Finally, since shading or coloring of contour intervals emphasizes patterns not immediately evident from the contours, the map was then color shaded as shown in Figure 6.

The data were also converted to digital form for a later, more extended analysis by digital computer. A preliminary step in this analysis is the presentation of the magnetic data in a perspective view drawing. Like the color shading mentioned above these perspective drawings are helpful in discerning anomaly patterns that are difficult to recognize in the contour maps themselves. In Figure 3a a perspective view of the magnetic data, taken from the South East, is shown to illustrate this effect.

All the maps presented in this report are oriented with respect to magnetic north, since this is the important direction used in the interpretation.

Interpretation

The color shaded map, Figure 6, shows the important magnetic patterns more clearly than the simple contoured map, Figure 3. The general pattern is one of strong radial anomalies on the southern half of the pyramid's surface, turning into gentle broad circumferencial anomalies on the northern half. Near the top and to the south is a striking magnetic high falling off sharply to the north into a tight arc-shaped low area. These anomalies show up clearly in the perspective view, Figure 3a. The major anomaly near the top is very evident in this persepctive view and stands out as the most important feature in the data. The color shading is likely to place undesirable emphasis on minor features if they happen to be colored overly brightly. Unfortunately this is the case for the blue areas of Figure 6. The eye is drawn to the blue as an area of maximum anomaly, whereas in fact it is only the small area of dark blue-violet near the top which is indicative of a truly anomalous region. The red area is clearly anomalous, sitting two full color intervals (orange and yellow) above the general "background". In interpreting the field map, it is also important to realize that the zero level contour is somewhat arbitrary. For the detailed analysis to follow, we have used the ratio value 1.334400, the approximate value of the rubidium/cesium constant, as the zero level but since this ratio will go up or down with respect to the fixed station it is obvious, for example, that if the fixed station were placed on the highest magnetic anomaly then the whole map would come out with negative contours. A better approach would be to take the mean of all the data points as a zero but this is a rather tedious process without having the data in digital form.

In the present case the choice of the zero level was somewhat subjective, having been arrived at after considerable experimentation with various models. We will see in the discussion to follow that it is the pattern of the interpretational model that is important rather than the exact numerical fit. The area at the top of the pyramid was not surveyed due to the presence of several concrete blocks with imbedded iron bolts. Some readings taken within 6 meters of the center showed steep gradients with anomalies as high as 100γ's. It is unlikely, however, that the iron bolts are responsible for the extreme values of the magnetic low encountered about 6 meters due south of the center (the deep blue-violet on the color map) and it is evident that the accentuation of the low at this point is due to very shallow magnetic objects, perhaps buried iron pipe.

The large magnetic low in the north west is caused by roofing metal, and probably a host of other iron objects associated with the closest of all the encroaching houses mentioned earlier.

The radial pattern is produced by the radial ridge and gully topography of the pyramid (see Figure 4). The Earth's magnetic field in the La Venta area has an inclination of approximately 45° so that on the north side of the pyramid the field is parallel to and inclined at only 15° to the ridge and gully pattern. At such low inclination very little secondary field is to be expected. On the eastern and western flanks, however, we might assume that the ridges were represented by long cylinders with a component of the field perpendicular to them, giving rise to typical high on the south low on the north anomalies. While the actual combination of multiple ridge effects will not yield a simple pattern the radial nature of the anomalies should be most pronounced on these flanks. On the southern surface the field is of high inclination to the ridges and of zero strike with respect to them, so that the pattern of the anomalies will be broad highs coinciding with the ridges. This general pattern is so well demonstrated in the magnetic map that there is little doubt that these features are in fact due to the topography.

The magnetic low area just off the centerline at the extreme south of the area surveyed coincides with a bulldozed excavation and probably results from the removal of this magnetic soil layer. A "hole" in magnetic material produces a reversed anomaly, i.e., a low over the hole surrounded by smaller highs. The pits on the north slope of the pyramid will have much smaller anomalies due to the low inclination of the field. The small anomaly almost on the center line at the southern margin of the map is a clear example of the inverse anomaly having been observed over a well defined pit about 1.5 m in diameter and 1.0 m deep. The small isolated 6γ low about 15 m farther west is associated with a small basalt block of .5 m maximum dimension. The maximum anomaly expected from such a small block of basalt (susceptibility 10^{-3} e.m.u.) is on the order of 10γ. The interesting feature is, however, that the anomaly is negative rather than positive indicating a high magnetic remanence for the block. This fact will be considered further in the final summary.

The apparent high susceptibility of the soils was unanticipated, since soil samples from the La Venta site, taken in 1968, were tested for their magnetic susceptibility prior to the survey and found to be essentially non-magnetic. A crude test of soil susceptibility on the pyramid was made by placing small cups of soil of known volume four inches from the sensor. The highest anomaly produced in this test was .26γ, yielding a susceptibility of 7×10^{-5} e.m.u. The uncertainty in this crude test is on the order of 5×10^{-5} e.m.u. so it may only be concluded that the soil susceptibility is between 10^{-5} and 10^{-4} e.m.u. A too hasty calculation in the field led the senior author to believe the susceptibility was less than 10^{-5} and to conclude that the topographic effect was caused by a magnetic sub-layer.

Soil susceptibilities of this order are not uncommon. Le Borgne (1955), Aitken (1961), and Cook and Carts (1962) have shown that many highly organic soils have volume susceptibilities of 5×10^{-4} e.m.u. due to the in-situ formation of the mineral maghemite. However, as Le Borgne has pointed out, in areas of high humidity where the drainage is sufficient, the iron is usually leached out. Why the soil of the La Venta pyramid should remain so magnetic is not known.

The contradiction between this survey's results and the tests made prior to the survey may be due to the following two factors. The "soil" samples tested may have been taken below the actual soil line or the pyramid may be made of quite different clays and sands than the surrounding features.

It should be noted for future work of this sort that the optimum survey should be preceded by some carefully controlled soil sampling and magnetic susceptibility measurements with a standard susceptibility bridge or with an in-situ susceptibility meter.

The effect of this surface layer of magnetic material is to mask anomalies from subsurface bodies with a "noise" level of 5 - 10γ. This could be removed by digital processing of the data, namely by assuming a surface layer of variable thickness and magnetic susceptibility and calculating, by surface integration for each data point, a new map of topographic anomalies alone. The best fit to the observed topographic effects would then be subtracted from the actual data leaving a map of anomalies from subsurface bodies. Fortunately in our case the main anomaly, just south of center, is sufficiently above the topographic noise level so that this costly correction is not necessary. In our discussion of this anomaly we will have occasion to discuss the effect of the topography on the interpretation, but it will not be necessary to make calculations for it.

Finally the presence of the pronounced topographic effect decreases the sensitivity requirement so that a sensitivity of 0.3γ would have been sufficient for this survey. This, however, could not have been foretold and the survey was actually run at a .0325γ sensitivity.

The large magnetic anomaly to the south of the center of the pyramid has been replotted in greater detail in the detail map, Figure 5. For this plot the ratio 1.334400 was chosen as the zero level, the ratios were converted accurately to gammas, and the final map was contoured with an interval of 2γ.

The pattern of this anomaly is complex, although it may conveniently be broken down into two parts. The first is the broad high contained within the 10γ contour, with an associated belt of lows roughly outlined by the zero contour, which runs from the southeast, across the top of the pyramid and off to the northwest. Superimposed on this general high-low pattern is a further region of high values confined within the 26γ contour. The very high gradient along the northern and eastern margin of the broad high suggests an origin near surface while the extent and slope to the west and south suggest that the high is caused by a relatively large body at greater depth.

To effect a quantitative interpretation of this anomaly, we have designed a program to compute the anomaly due to any three-dimensional rectangular block *as measured on the surface of an approximately equivalent cone*. This program could equally well compute the anomaly on the actual surface, but this would require digitization of the topographic map, a step considered unnecessary for the present interpretation. The method of computation is that outlined by Bhattacharyya (1964).

An important assumption involved in all the discussion to follow is that the anomalies observed are the result of induced magnetization and that remanent magnetization is negligible. The separation of the two effects is a major problem when dealing with high iron minerals such as are anticipated here in the basalt. Probably the only satisfying comment that can be made about this situation is that if the remanent magnetization is strong, i.e. as strong as the induced, there will still result a strong anomaly that will certainly be interpreted as a magnetic body, but the interpreted body may be in error. Only rarely will the magnetic bodies be placed in such a fashion that the two fields cancel. That remanence is a problem in this survey is undoubted, since the only known piece of basalt detected (the small isolated 6 low mentioned earlier) had a remanent inverted anomaly.

In large structures, platforms, walls, etc., the remanent field of each piece of basalt used in the construction will cancel leaving the induced anomaly. It will be safe to proceed with the induced-only interpretation if the anomaly is large and "complicated" in this sense. The interpretational blocks are thus assumed to have no remanence.

The use of such blocks represents the practical limit of complexity in interpretational models. Since, by its very nature, the potential field is non-unique, there is nothing to be gained using models with greater shape variability. As with all indirect techniques, it is necessary to choose a model which is geologically realistic and which provides a good general fit to the data. This process, while not presenting a "true" picture of the causative body does allow estimation of the extent of the body and its depth limits. Presumably in archaeological studies even more restraints may be placed on the model to improve reliability. In the present case, for example, it is expected that any significant structures will be basalt so that a susceptibility value may be assigned to the model. Further, sharp discontinuities are expected between any structure and the surrounding clay or sand, whereas in the normal mineral exploration survey the magnetic rock unit may have a very poorly defined or irregular contact causing the anomaly to spread misleadingly.

In this interpretation a value of 10^{-3} e.m.u. has been assigned for the susceptibility of the model material in order to represent an average basalt. In their study of the rock types used in Olmec monuments, Williams and Heizer (1965) describe most of the rocks used at the La Venta site as olivine basalt with scattered magnetic grains which would certainly not classify them as iron deficient. Assuming a normal basalt, and since roughly 50 percent of the basalts tested by Slichter (1942) had susceptibilities between 10^{-3} and 4×10^{-3} e.m.u., it is evident that the choice of 10^{-3} is in fact conservative.

The values have been calculated for points on the surface of an equivalent cone; these project in plan to an equidimensional grid. These points are then contoured within the computer program and the resulting anomaly is plotted by a CALCOMP plotter. The computer drawn maps for the detail map area are on the same scale as the data plot, Figure 5. All data has been plotted with the vertical margin of the plot corresponding to magnetic north. For all the calculations in this study, the Earth's field is assumed to be 44,000γ with an inclination of 45° and a declination of 8°30' west of geographic north. The equivalent cone is 30 m high and 80 m in radius.

The horizontal location of a block will be given in a plan drawing, with the vertical coordinate (Z) and the half height (Δz) written on the drawing. The x coordinate is positive north, y positive east, and z positive up, all with respect to the base and center of the pyramid.

From a preliminary inspection of the anomaly, it may be suspected that the anomaly could be the result of a discontinuity in the susceptibility of the surface soil layer. Since the block models have sides that parallel the coordinate axis, models representing layers parallel to the pyramid slope must be approximated by horizontal slabs with an appropriately corrected inclination. A second program was written to calculate the field observed on a horizontal grid above a horizontal slab thus approximating the pyramid surface over a limited area by a flat plane. These anomalies were calculated and plotted for the detail area as in the block model and are also presented in the same scale as the detail map, Figure 5.

Values of soil susceptibility are usually less than 10^{-4} e.m.u. and certainly the susceptibility contrast will be even less for natural soil gradations. Further, natural soils will not possess abrupt discontinuities so maximum effects may be calculated using thin slab models with vertical boundaries.

A large slab 10.5 meters on a side and of varying thickness has been chosen as a representative model for the anomaly in Figure 5. The resulting contour maps for slab thicknesses (h) of 0.5, 1.0, 2.0, and 4.0 meters are shown in Figures 8 to 11. The outline of the slab is shown in heavy dotted lines in Figure 8. To assist in the study of these models and their relationship to the field data, the N-S profiles, B-B', through each contour map are presented in Figure 22 and these may be compared to profile B-B' of Figure 5.

In all models the anomalies were obtained for a sensor height above the slab of 0.5 meters.

It is obvious from these plots that a thin discontinuous soil layer (0.5m) cannot produce the observed anomaly either in character or in amplitude. The extremes of the anomaly occur close to the nothern and southern margins of the body and the maximum value is less than 6γ. Increasing the susceptibility from 10^{-4} to 5×10^{-4} would amplify the anomaly magnitudes appropriately but would preserve the isolation of the high and the low.

As the thickness of this slab increases, however, the anomaly, at least in the profile shown, becomes remarkably similar to the observed data. The slab 4 meters thick has roughly the same "width" (indicated by Δ_{x_1} on the profile, Figure 22) on the south as the field data, but is not nearly as wide (Δ_{x_2}) on the north as the field data. While this thick slab represents the central N-S profile quite well it fails in other respects. The field data is quite asymmetric in an East-West profile as section A-A' of Figure 19 shows, and the low area bounding the eastern and northern edges of the anomaly, trends off to the north west rather than wrapping around on the west as the slab model does. The model could probably be converted to a wedge, thickening to the East but this shape would be too costly to model with the existing techniques.

The result of this interpretation using the slab model is that the anomaly could be produced by some slab-like body at least 4 meters thick with a susceptibility of 10^{-4} approximately. Possibilities are: (1) a pit filled with highly organic soil, (2) a pit filled with stone other than basalt. It is difficult to imagine a pit of this composition and dimension showing no erosional expression or no surface gological expression. In fact, comparing the magnetic data (Figure 5) and the topographic map for the same area (Figure 7), it can be seen that there is no apparent correlation between the proposed pit and the topography. Should the pit have been filled with a less susceptible stone than basalt (e.g. serpentine) then a significant archaeological structure is still indicated.

The above interpretation is restricted by the susceptibility assumed for the slab material. To expand the interpretation to include the typical basalts that have been assumed for monument material requires the model structures to be at greater depth. For example, if the preceding slab models were of basalt the anomalies would be increased tenfold. The 0.5 widths, Δ_{x_1} and Δ_{x_2}, would be too small to approximate the field profile. (Increasing the susceptibility simply multiplies the anomaly but does not change the position of the peaks, troughs, zero crossings, etc. in the horizontal dimension). To increase these model widths it would be necessary either to deepen the slab or increase its thickness, and the latter process would of course make the amplitude of the anomaly too high. After a number of such models (i.e. slabs of basalt at varying depths) were processed, it was found that deepening the model destroyed the essential character of the field profile and worsened the fit around the margins.

Turning to the "standard" buried block models now becomes a matter of trial and error fitting procedures. This process is extremely tedious and also quite costly in computer time so that in the present analysis it has not been continued beyond a model that provides a basic fit. From this basic fit and from a knowledge of the behaviour of the anomalies from bodies of varying parameters, it is possible to postulate a number of likely configurations for the actual causative body.

Single block models proved early in the interpretation to be inadequate. This combination of the steep gradients around the margin and broad high to the south necessitated multiple bodies. Wall-like structures were then placed close to the surface to provide the steep gradients and the final configuration achieved is shown in the plan diagram, Figure 12, as Model 5.

These plan diagrams have the elevation of the top of each block written on the block. The surface elevation of the pyramid at a point directly above that corner of the block which comes closest to the surface is noted in the plan view just off the block. It is assumed that the sensor is positioned on the equivalent surface. Thus in speaking of depth of a body below the surface the depth is actually that below the sensor.

The east-west wall of Model 5 is higher than the north-south wall, but the north-south wall comes within 1.0 meters of the surface, accounting for the 18γ peak to the south in Figure 15. The A-A' and C-C' profiles of Figures 19 and 21 show a fairly good fit in general shape for the two walls alone, but it is evident that the whole anomaly must be "pushed up" and that the north wall should be brought closer to the surface.

To effect the general uplift and broadening of the model anomaly large blocks of basalt at depth were added to the model. Model 5b is a combination of the two walls mentioned previously and a large block (4 x 4 x 6 meters, off center, and with its center 10 m above the base as shown in Figure 12). The A-A' and C-C' profiles for Model 5b show the result of this combination. The amplitude is in fact raised but the plan view of the anomaly shows the inadequacy of the result. No single large block (which would play the role of a major structure, such as a stone subpyramid within the pyramid) could be found to raise the central area of the anomaly (say the area within the 16γ contour of Figure 5). This area appears to be a magnetic platform upon which are superimposed wall-like anomalies. A wide flat slab, subparallel to the pyramid surface could result in this effect.

There is also the problem of the 30+γ high just off the N-S center line, below center, in Figure 5. This might be the effect of another block, but a single block here would have a marked low to the north rather than the gentle dip seen in Profile B-B', Figure 20.

The 30+γ high and the general area of values greater than 20γ were finally well approximated with the wall-plus-horizontal slab model (Model 6a) of Figures 13 and 16. In this model a thin (0.5m) horizontal slab forms a base for the two walls. The slab itself comes within 1.0 meter of the surface, the east-west wall within 1.0 meter, and the north-south wall within 1.5 meters. The resulting fit as seen in the contour maps is good, except for the fact that, again, the whole model anomaly needs to be pushed up and that the west side of the anomaly has to be stretched out considerably. Profile B-B' of Model 6a has a slightly smaller width on the north than the field data, indicating that the actual body is slightly deeper than the model. Profiles C-C' and A-A' of the field data are both taken over sections of maximum gradient, and the model profiles for 6a have approximately the same widths. These results indicate that the body is within 0.5 meter of the surface. It is more realistic however to consider the contour map itself and realize that the average width of the anomaly along the northern and eastern margins is greater than in the cross sections illustrated. The extreme low to the north is, as mentioned previously, almost certainly the result of another body farther north and the low (less than -10γ) on the east is due to accentuation by topography. This topographic effect is brought about by the gully coinciding with the low area thus bringing the sensor closer to the body in this area and increasing the magnitude of the anomaly. The position of the minimum in profile A-A' is thus shifted inward giving a false indication of depth.

This same topographic effect is responsible for the $30+\gamma$ peak's being isolated in the field data and an elongate ridge in the model. The high occurs in a gully where the observations were closer to the slab and thus higher in amplitude.

Model 6b is a variation of Model 6a wherein the platform has been dropped 0.5 m, the east wall brought within 0.5 m of the surface, and the north wall lowered 0.5 m. Model 6b provides a better fit to the field data in profile B-B' and to the east in profile A-A'.

To generalize these results, considering the topographic effects and the average width of the anomaly, it may be concluded that the walls assumed for the interpretation come within 1 - 2 meters of the surface of the pyramid.

None of the models presented accounts for the general magnetic high in the anomalous area nor for the gradual slope of the anomaly to the west. Nor do these models account for the fact that the magnetic low with the associated steep gradient runs off to the northwest instead of wrapping around to the southwest. This latter anomaly could be explained by placing another wall, starting at the western edge of the existing wall (block 3 of Figure 13) and running approximately NW for 10 to 15 meters.

In conclusion, the interpretation that emerges from these models may best be summarized in the following point form:

(a) The general magnetic high within the 16γ contour of Figure 5, or alternately the yellow area and higher of Figure 6 may be explained by a substructure within the pyramid. The center of mass of this body is displaced due south of the pyramid center by as much as 30 meters. None of the simple models that were used in the interpretation were successful in representing this feature. A slab-like body, possibly parallel to the pyramid surface, at a depth of 3 - 6 meters could be one explanation. It will be noticed in comparing the magnetic map (Figure 5) and the topographic map (Figure 7) that the two limbs of the magnetic high that develop to the south correspond almost exactly with two ridges that develop in about the center of the map area. The magnetization of the ridge and gully topography, high on the ridge and low in the gully is responsible for the split pendant shape of the general magnetic high. This effect is even more evident in the color shaded map.

(b) The detailed structure at the top is well represented by a thin slab platform with superimposed walls on the eastern and northern edges. "Walls" might well be basalt columns and the platform a pavement surface of small blocks. In order that the reader not be carried away with this interpretation, we add that the anomaly could also be caused by a rubble level of basalt blocks that simply come closer to the surface along the northern and eastern margin.

The major fact that emerges from the model interpretation is that the source of these anomalies near the top of the pyramid is almost certainly basalt and that it comes within 1 - 2 meters of the surface.

The precise location of the buried structure could possibly be outlined by probing the ground with steel rods. Alternatively the anomalies could be drilled at relatively low cost with a gasoline-powered auger or corer. These probings should be carried out in the vicinity of the magnetic highs. To dig the pyramid, the best technique would probably be to dig a trench running south from a point 4 meters east and 5 meters south of the center to a point 4 meters east and 13 meters south. From the southern end of this trench another trench should be run east into the gully for approximately 6 meters. These trenches should be at least 3 meters deep.

FIGURES

PLATES

Plate 1 Total packaged equipment for the magnetometer survey
  - a) Portable 350 watt generator (40 lbs.)
  - b) Case containing counter, couplers, fixed sensor, power supply, and power cable (50 lbs.)
  - c) Roving sensor (7 lbs.)
  - d) Coaxial cable reel for connecting fixed and roving sensors to the power supply and counter (25 lbs.)

Plate 2 Roving sensor and fixed sensor in operation

Plate 3 The read out unit

Plate 4 The read out unit

Plate 5 Clearing the underbrush from the pyramid

Plate 6 Roving sensor operator steadied by rope

Plate 7 Roving sensor positioned at 3 m mark on white cord

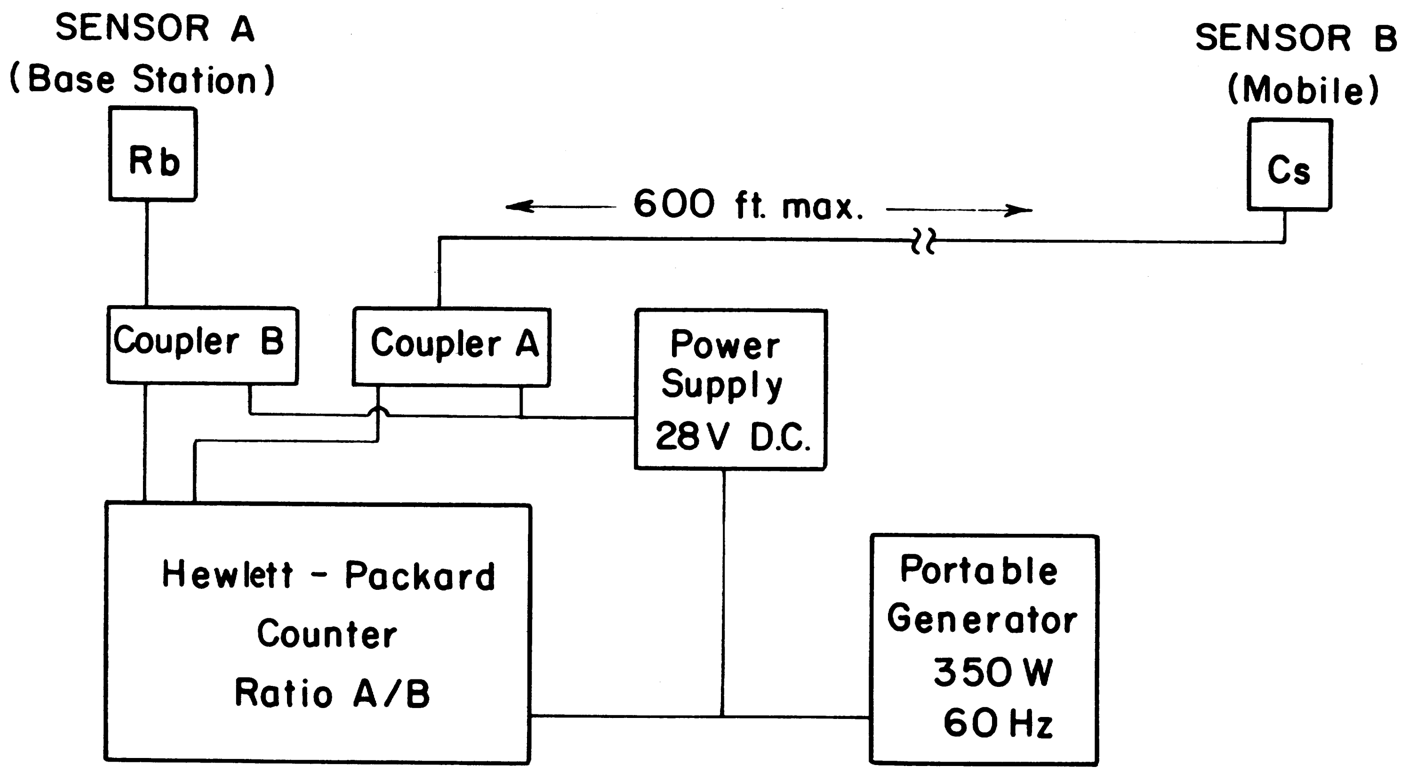

SCHEMATIC DIAGRAM OF MAGNETOMETER.

Figure 1

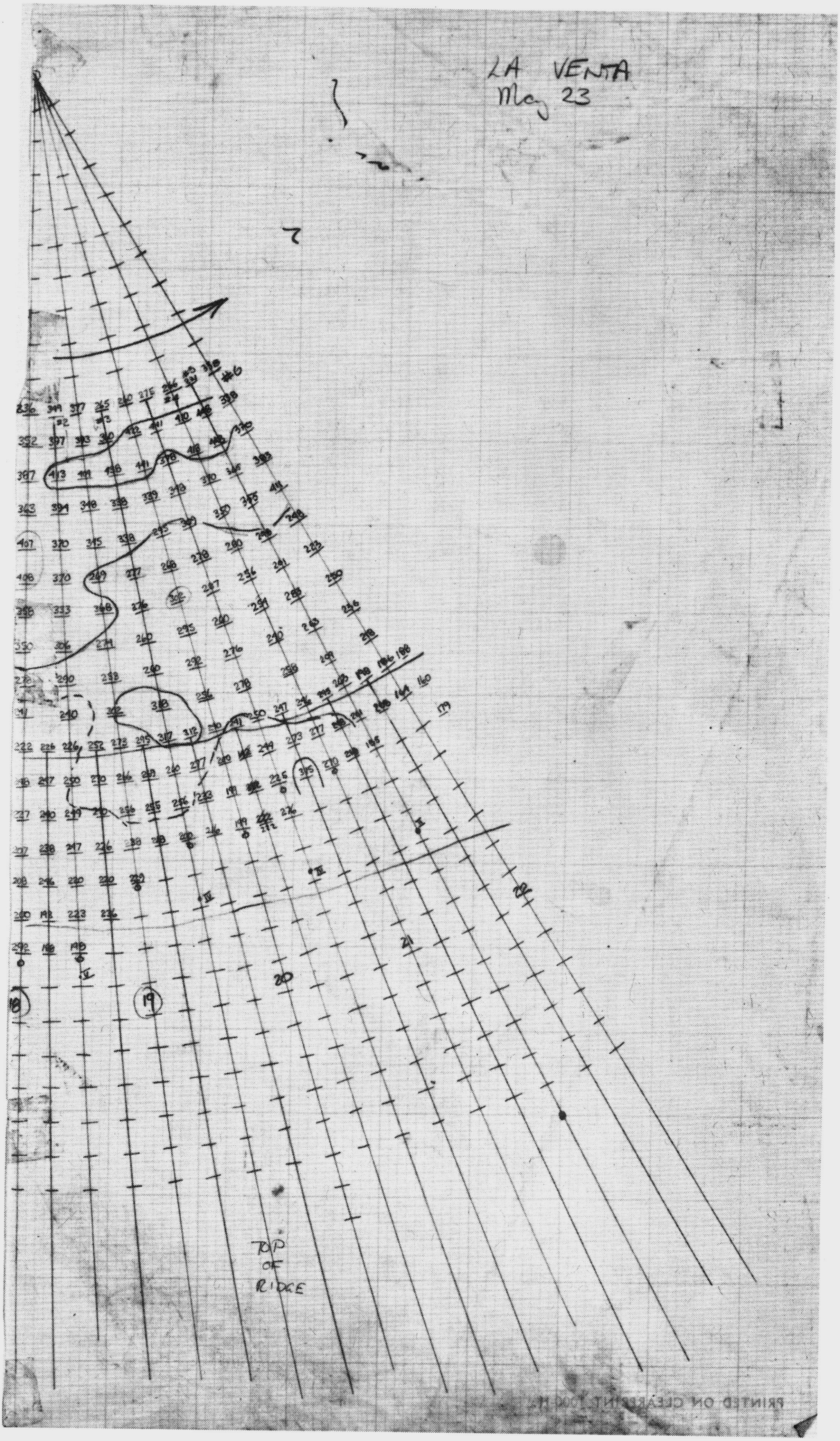

Figure 2

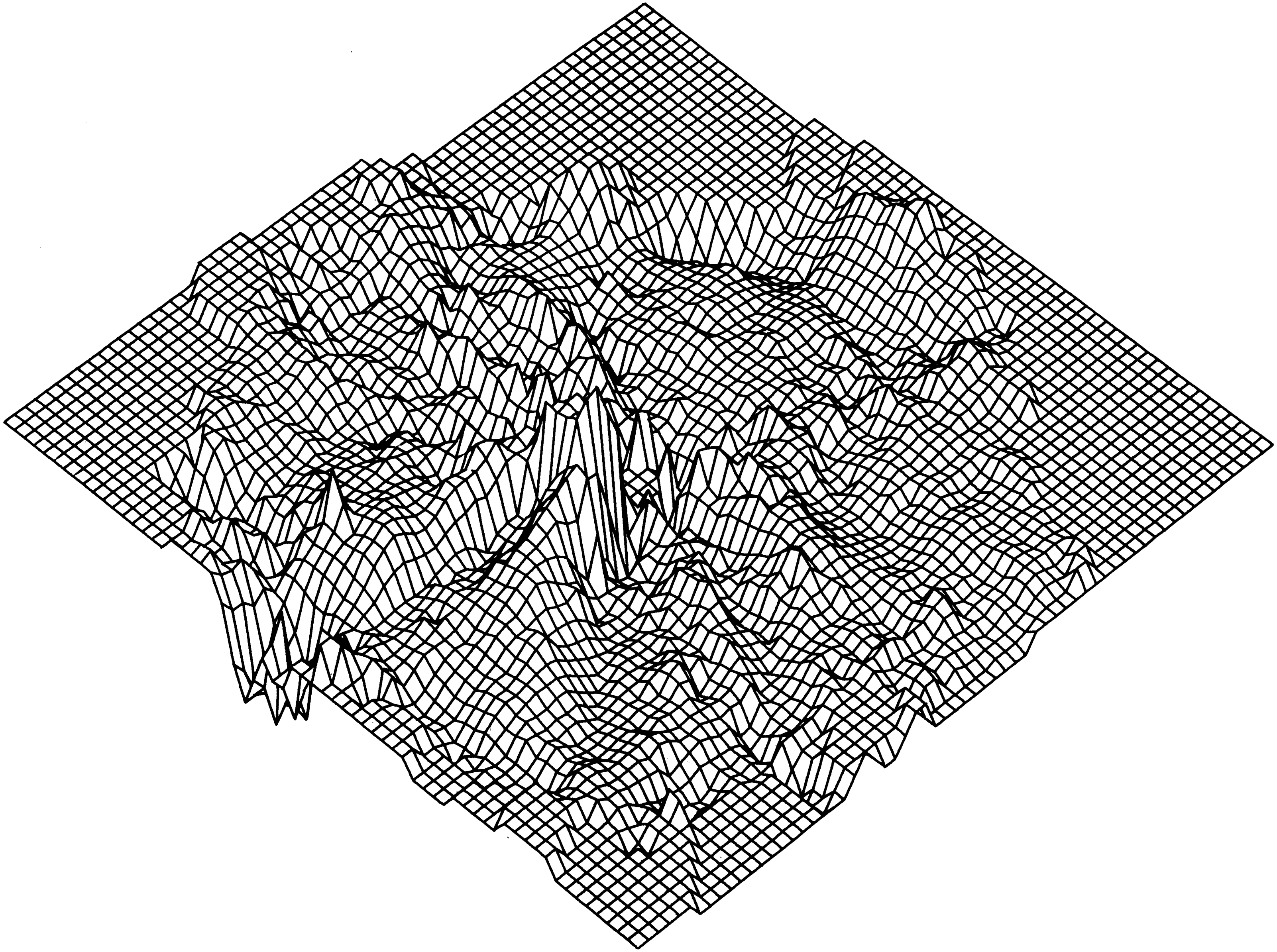

PERSPECTIVE VIEW OF MAGNETIC MAP.

Figure 3a

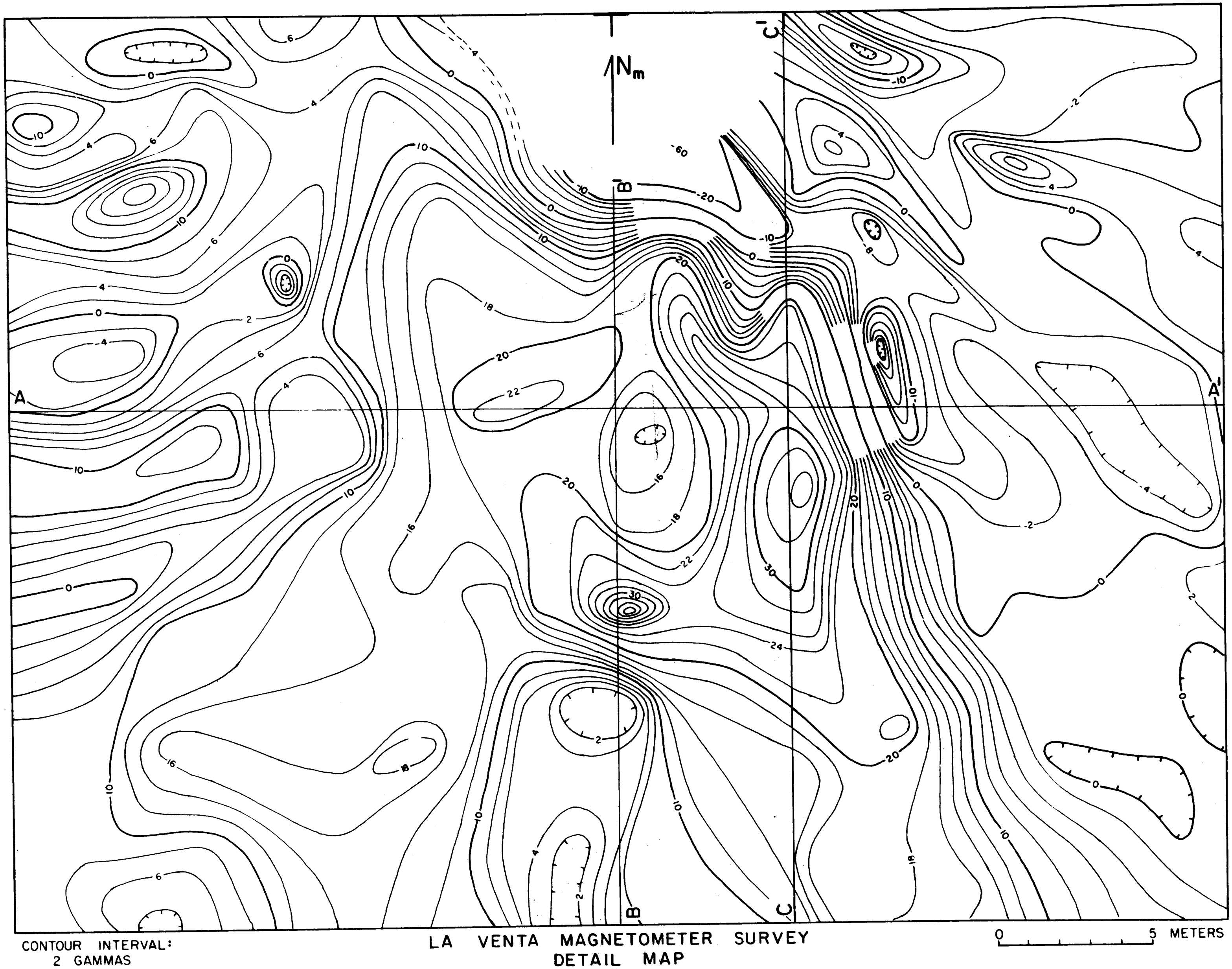

LA VENTA MAGNETOMETER SURVEY
DETAIL MAP

Figure 5

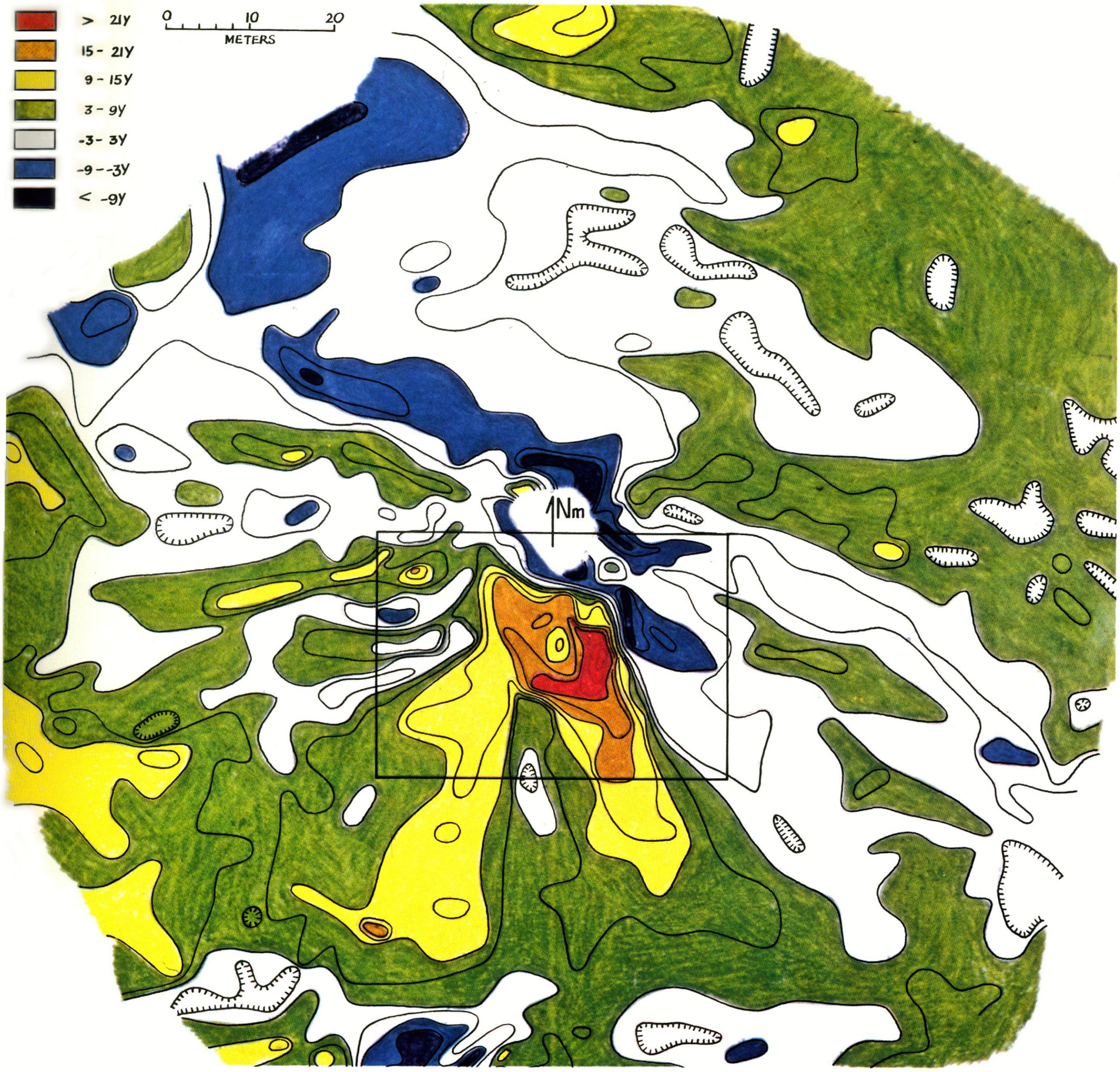

La Venta Pyramid
Magnetometer Survey

Figure 6

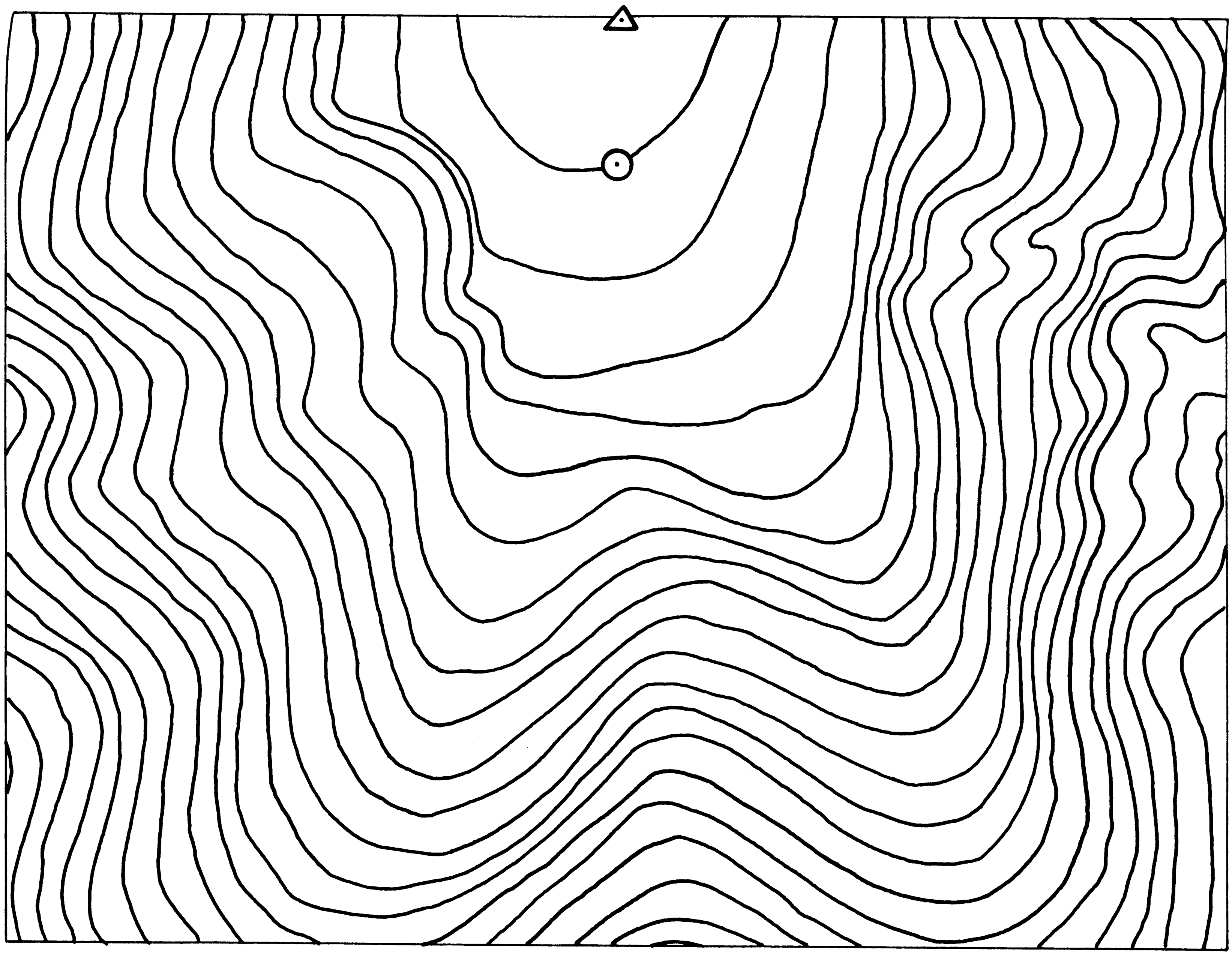

DETAIL MAP TOPOGRAPHY
FROM FIGURE 4

Figure 7

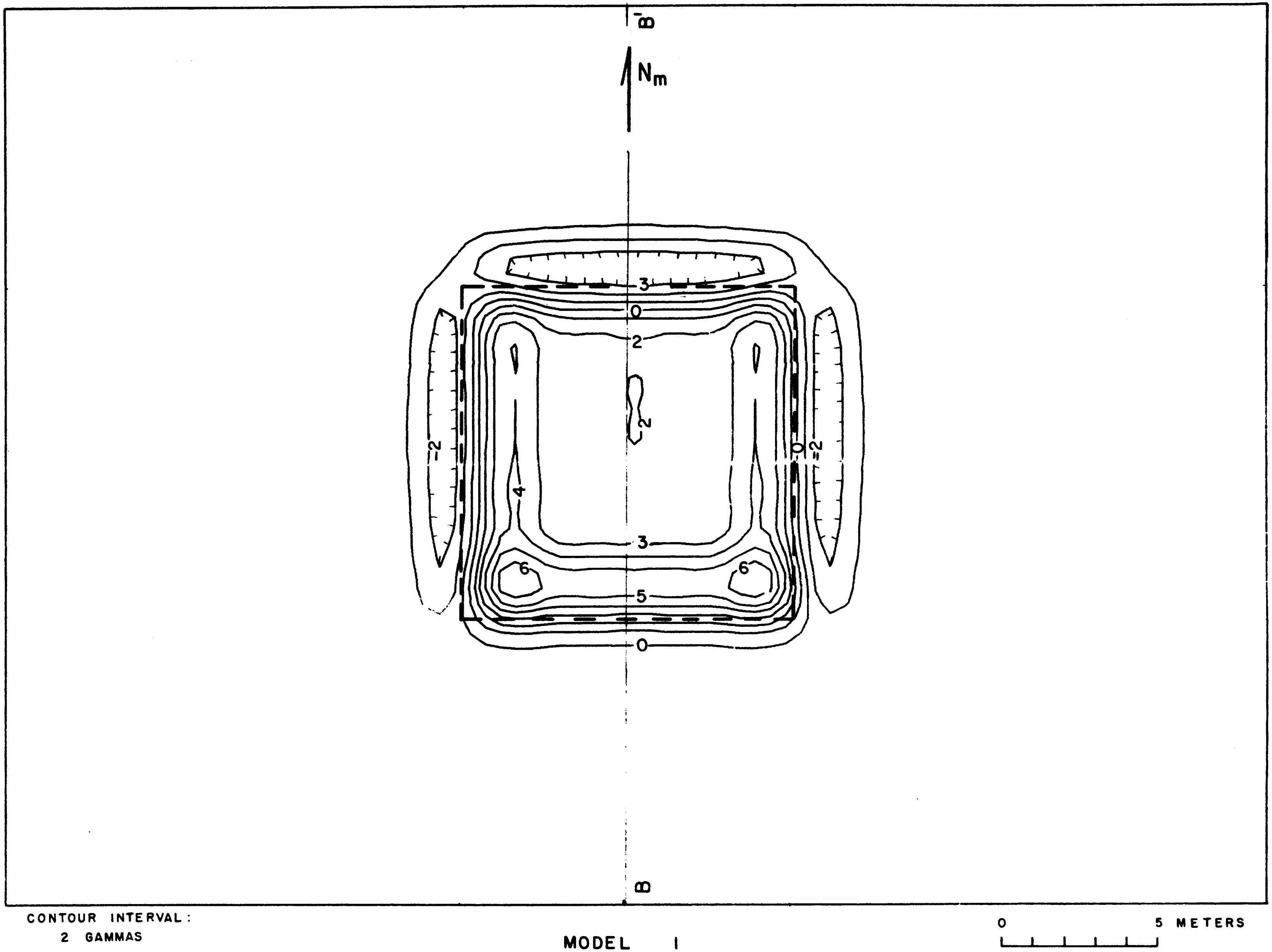

MODEL I

Figure 8

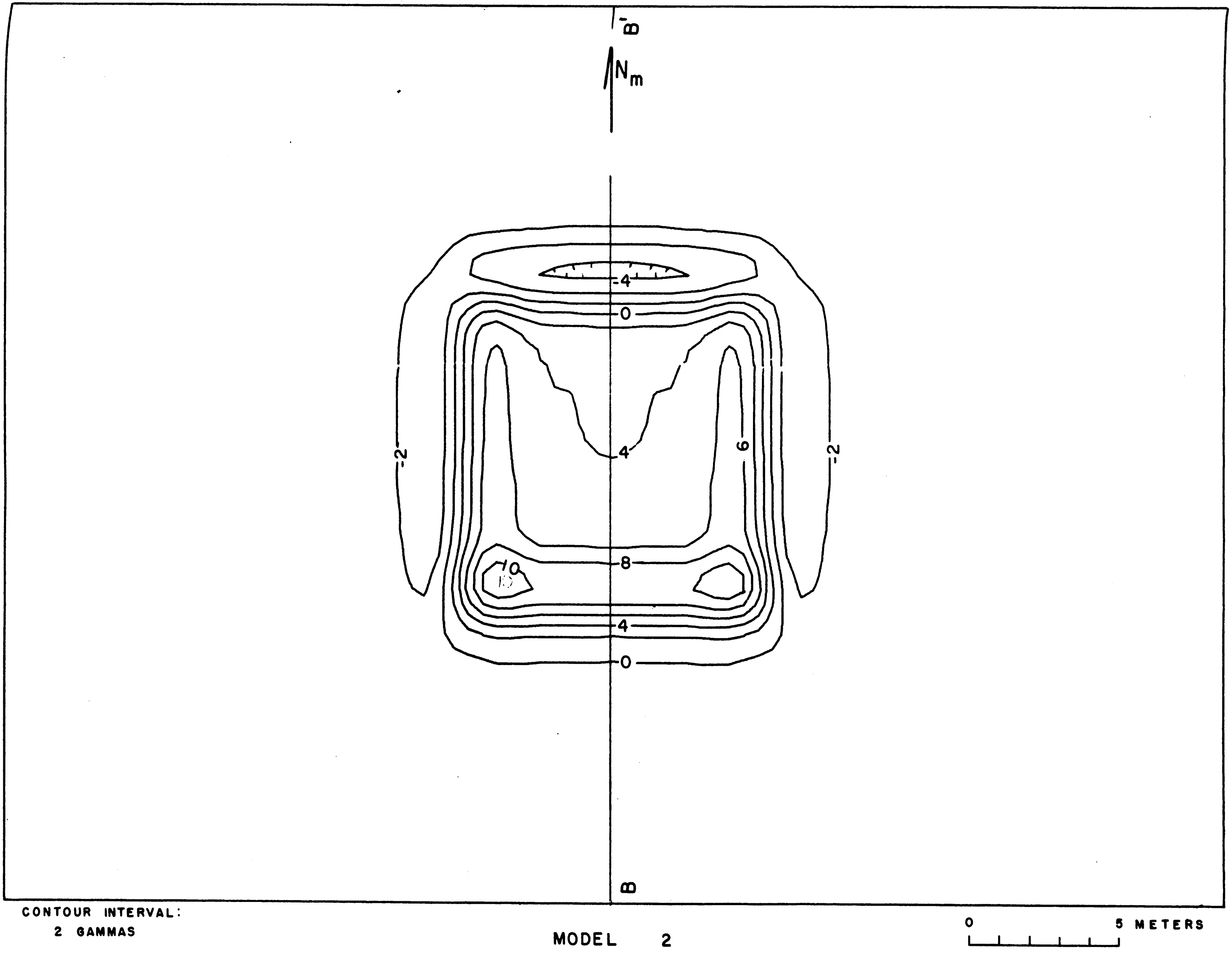B'
Nm
-4
0
-2
4
6
-2
10
8
4
0
B
CONTOUR INTERVAL:
2 GAMMAS
MODEL 2
0
5 METERS

Figure 9

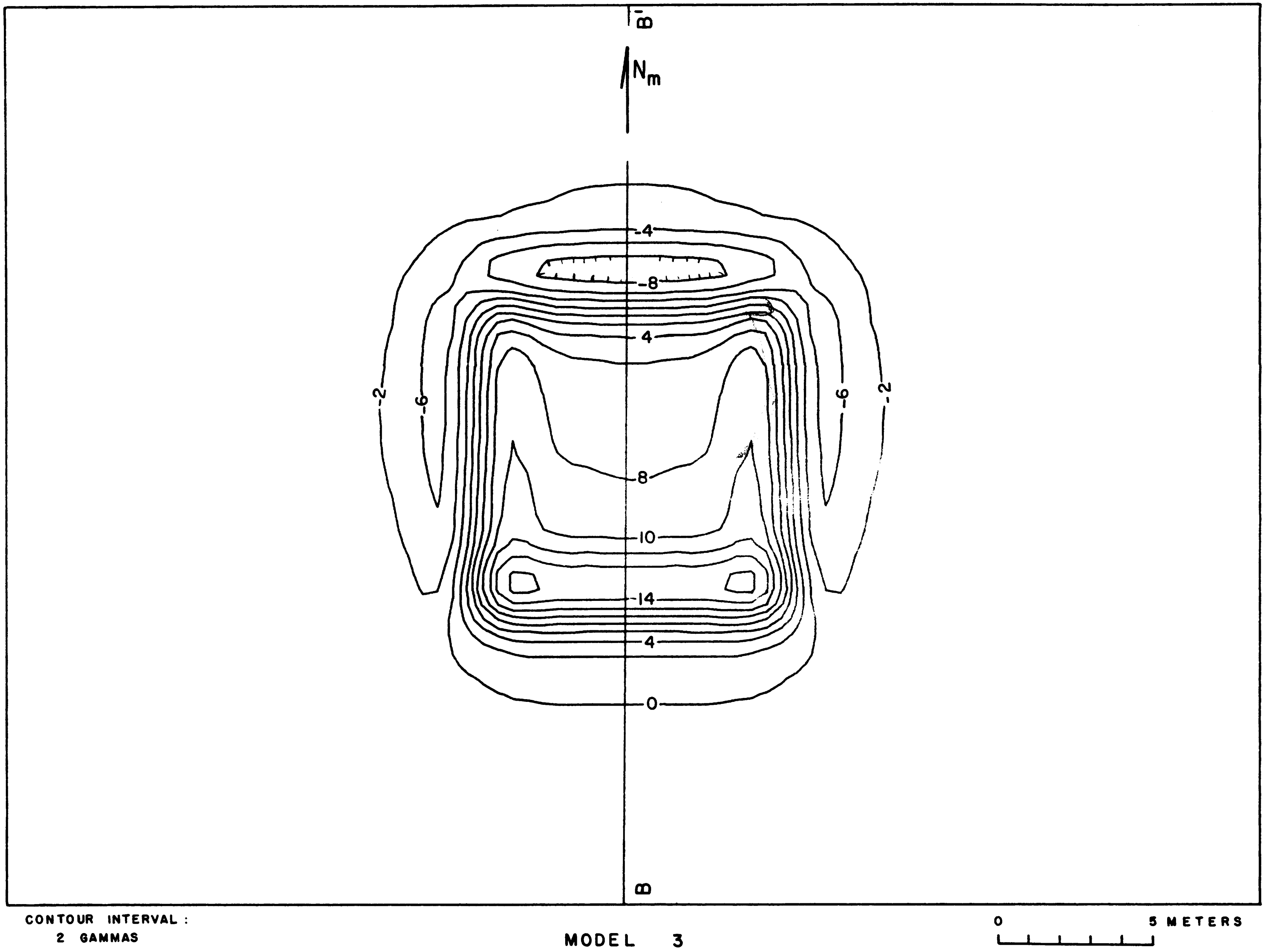

MODEL 3

Figure 10

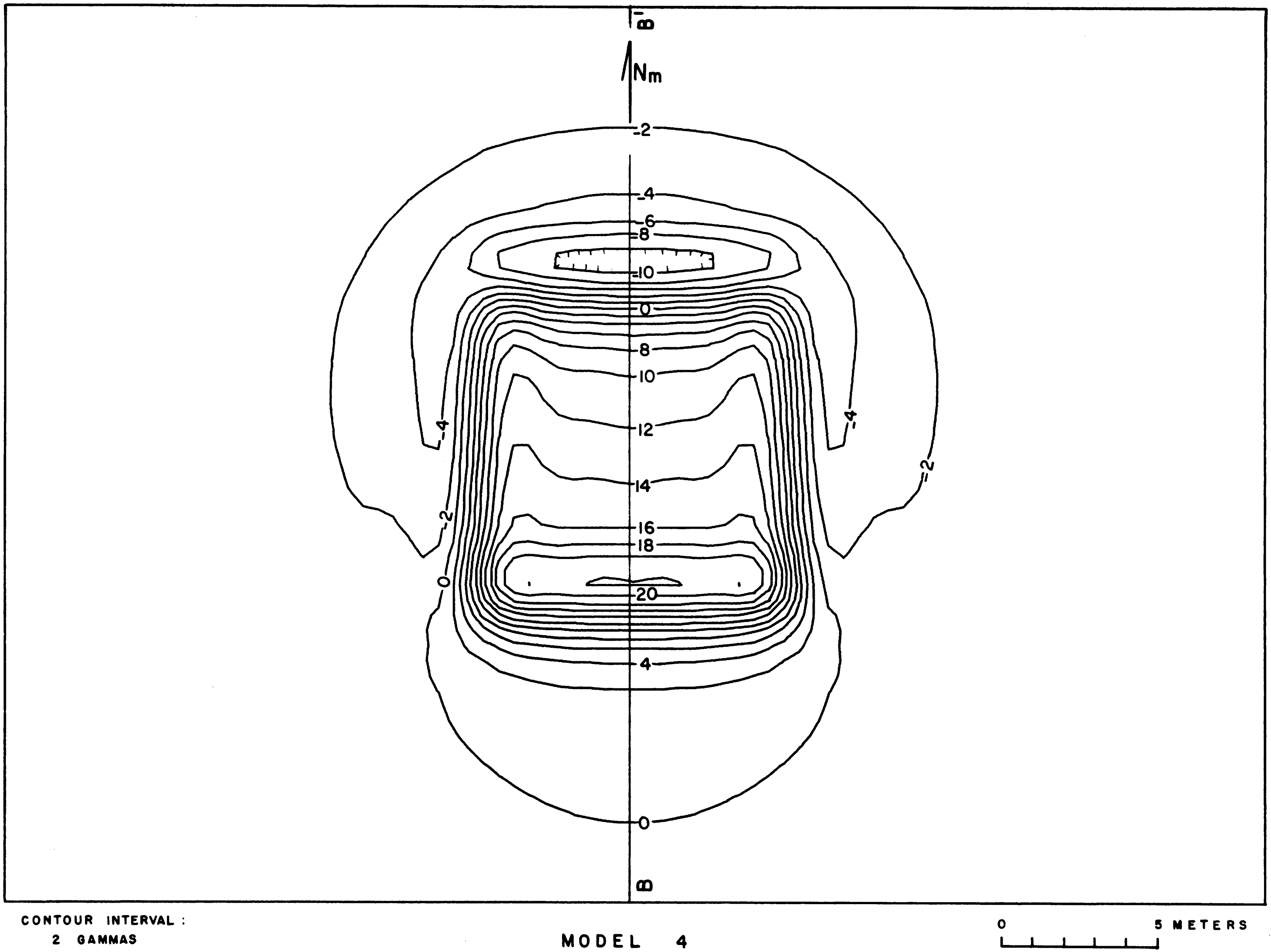

MODEL 4

Figure 11

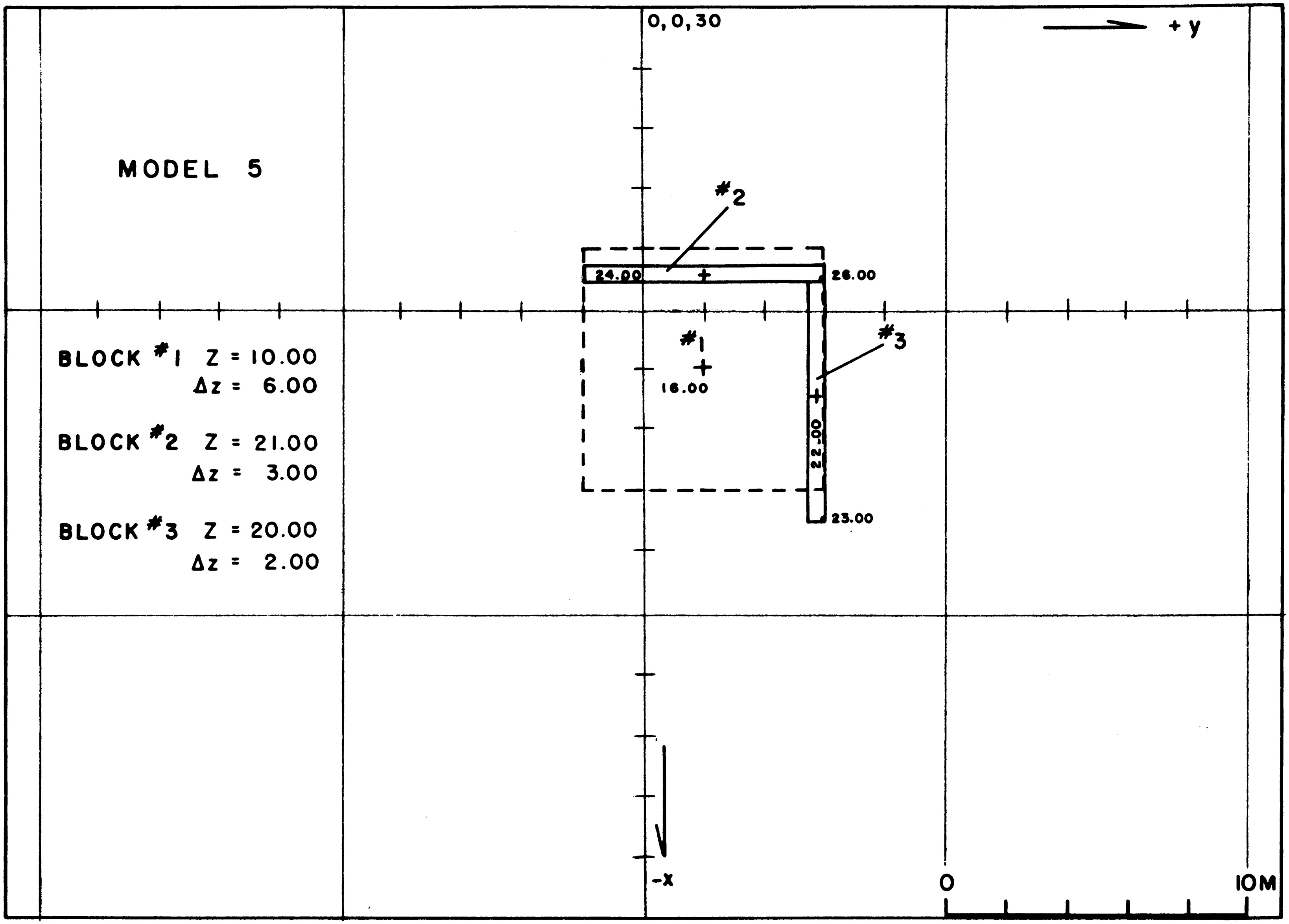
MODEL 5
BLOCK #1 Z = 10.00
Δz = 6.00
BLOCK #2 Z = 21.00
Δz = 3.00
BLOCK #3 Z = 20.00
Δz = 2.00
0,0,30
+y
-x
#1
#2
#3
16.00
24.00
26.00
22.00
23.00
0
10M

Figure 12

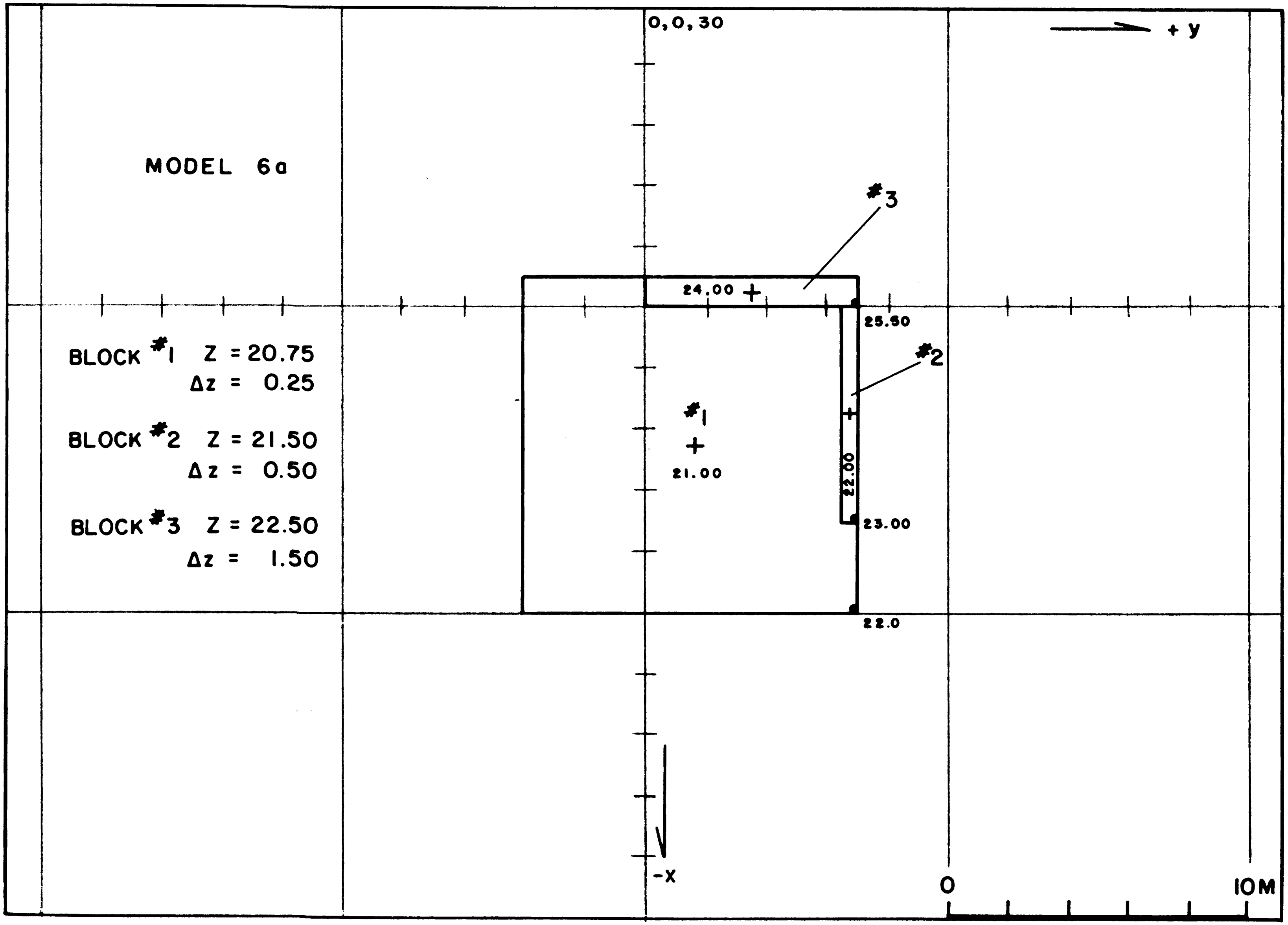
0,0,30
+ y
MODEL 6a
BLOCK #1 Z = 20.75
Δz = 0.25
BLOCK #2 Z = 21.50
Δz = 0.50
BLOCK #3 Z = 22.50
Δz = 1.50
#3
24.00
25.50
#2
#1
21.00
22.00
23.00
22.0
-x
0
10M

Figure 13

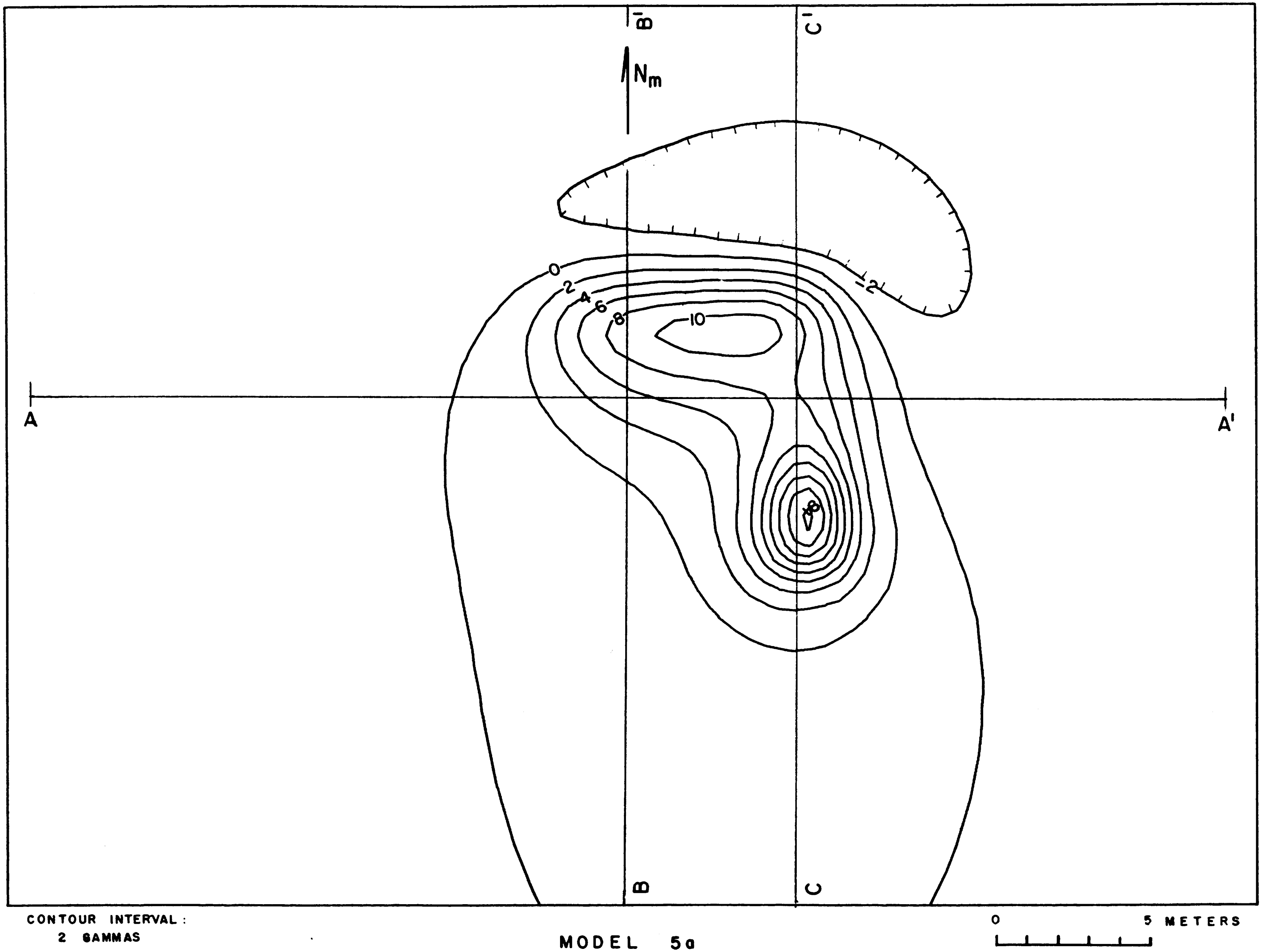

MODEL 5a

Figure 14

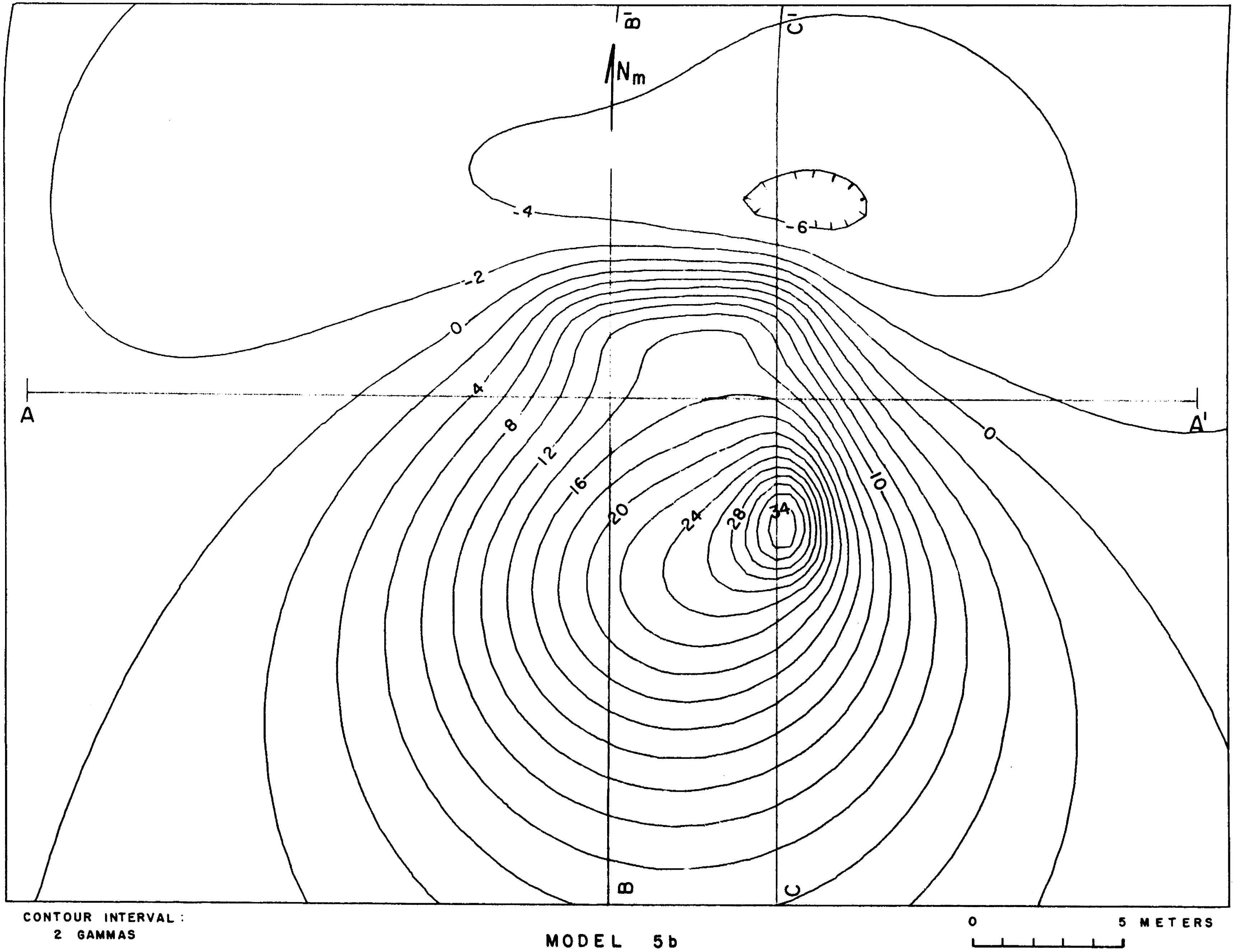

MODEL 5b

Figure 15

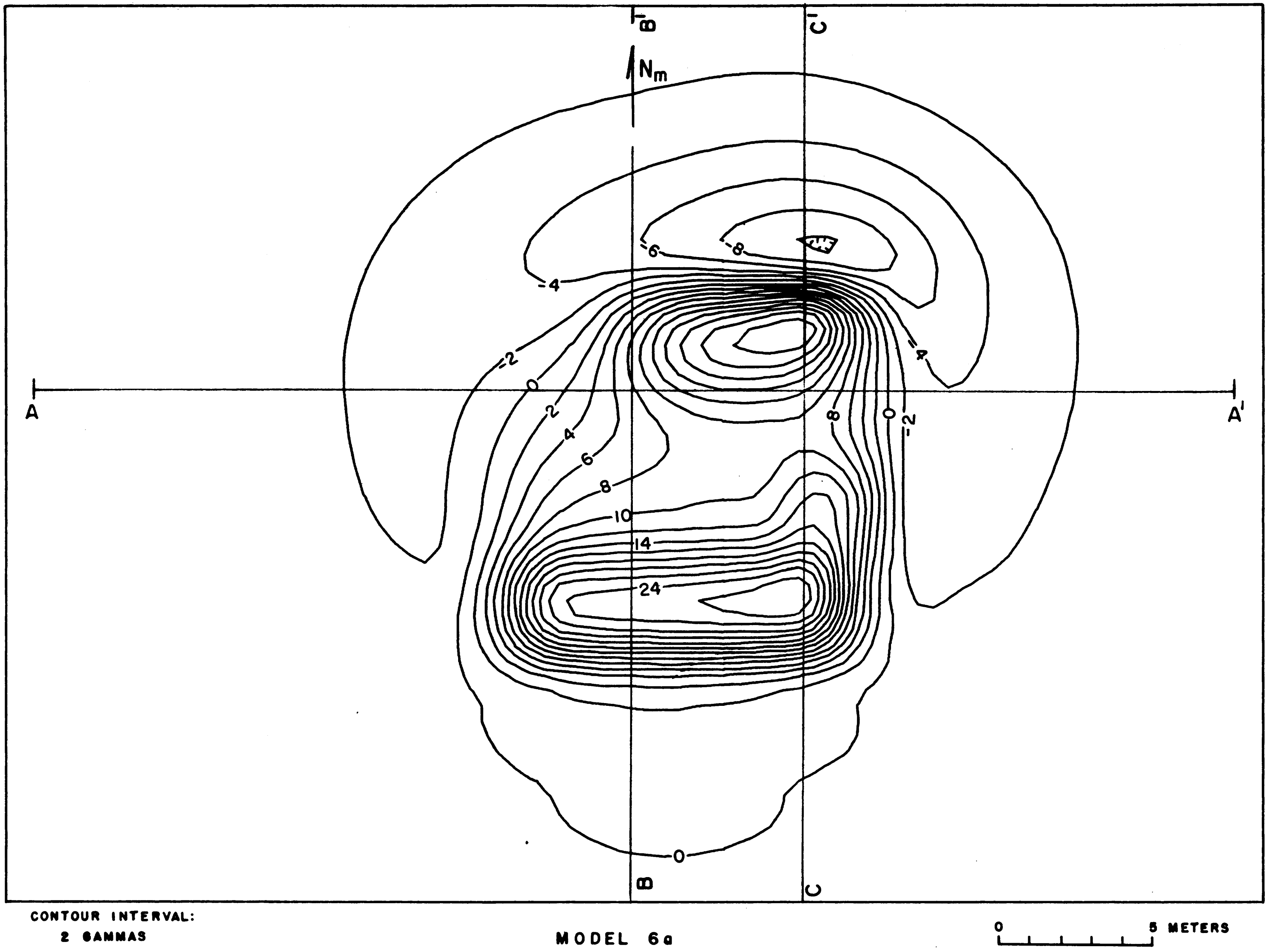

MODEL 6a

Figure 16

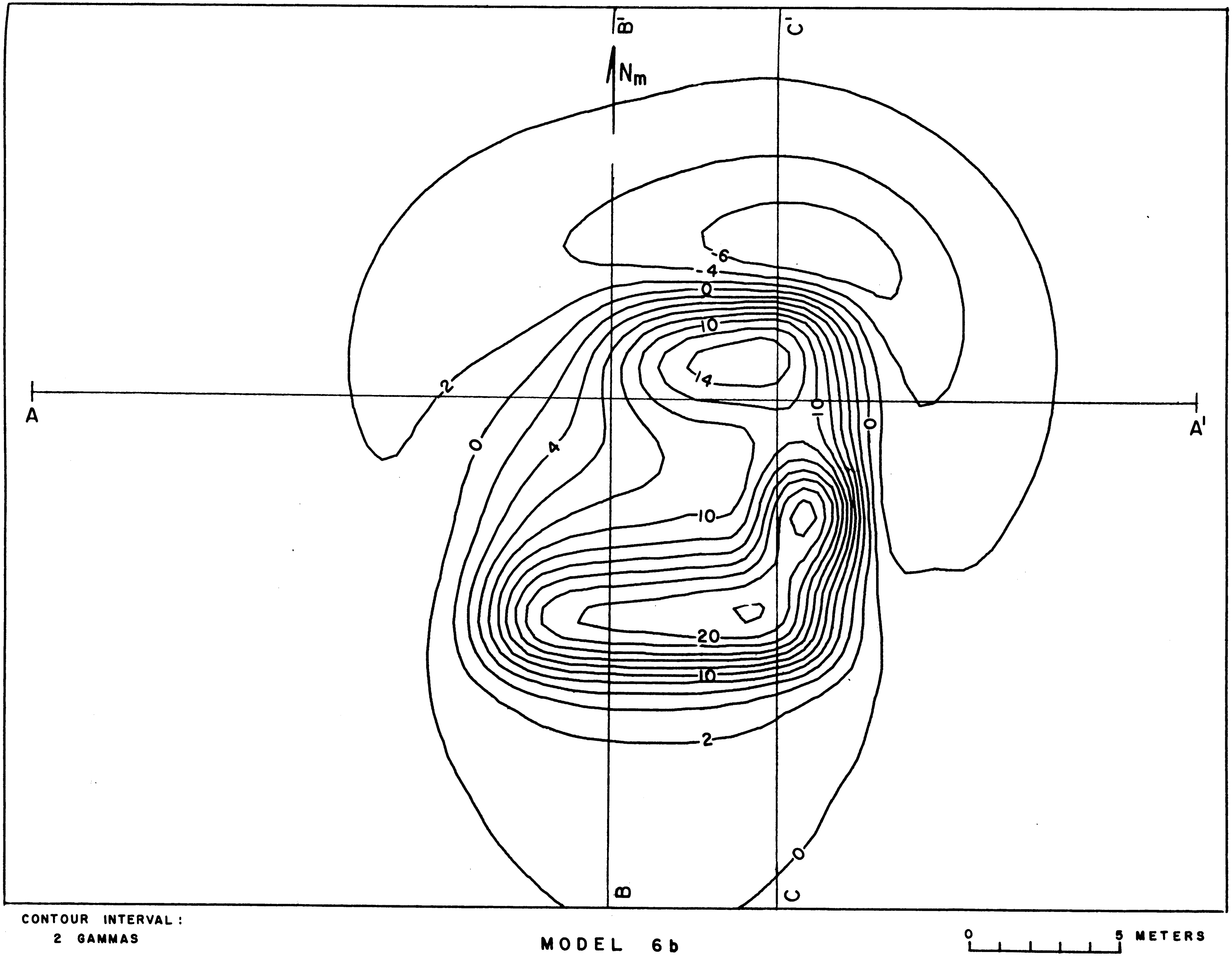

CONTOUR INTERVAL:
2 GAMMAS

MODEL 6b

Figure 17

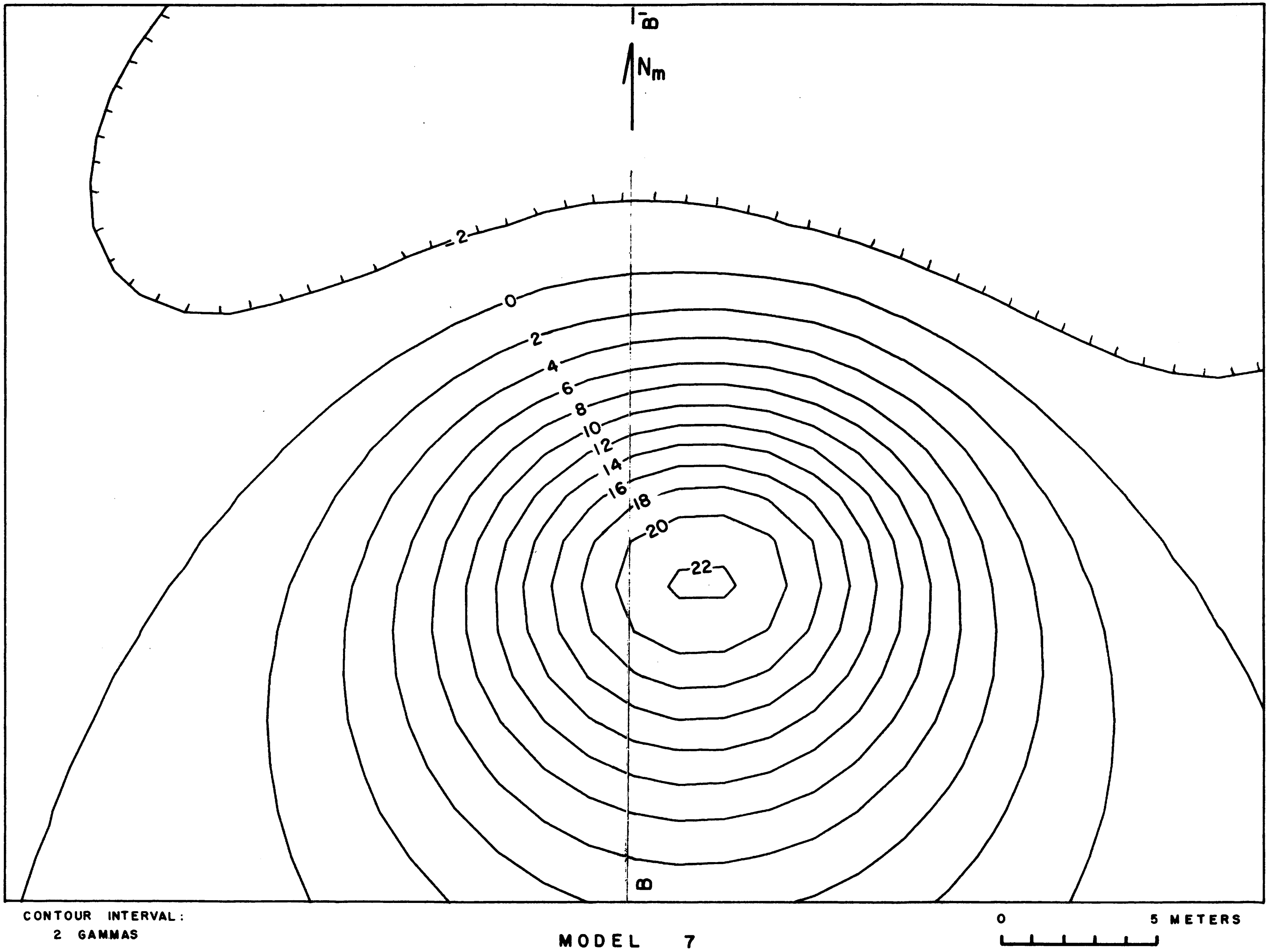
B'
Nm
-2
0
2
4
6
8
10
12
14
16
18
20
22
B
CONTOUR INTERVAL:
2 GAMMAS
MODEL 7
0
5 METERS

Figure 18

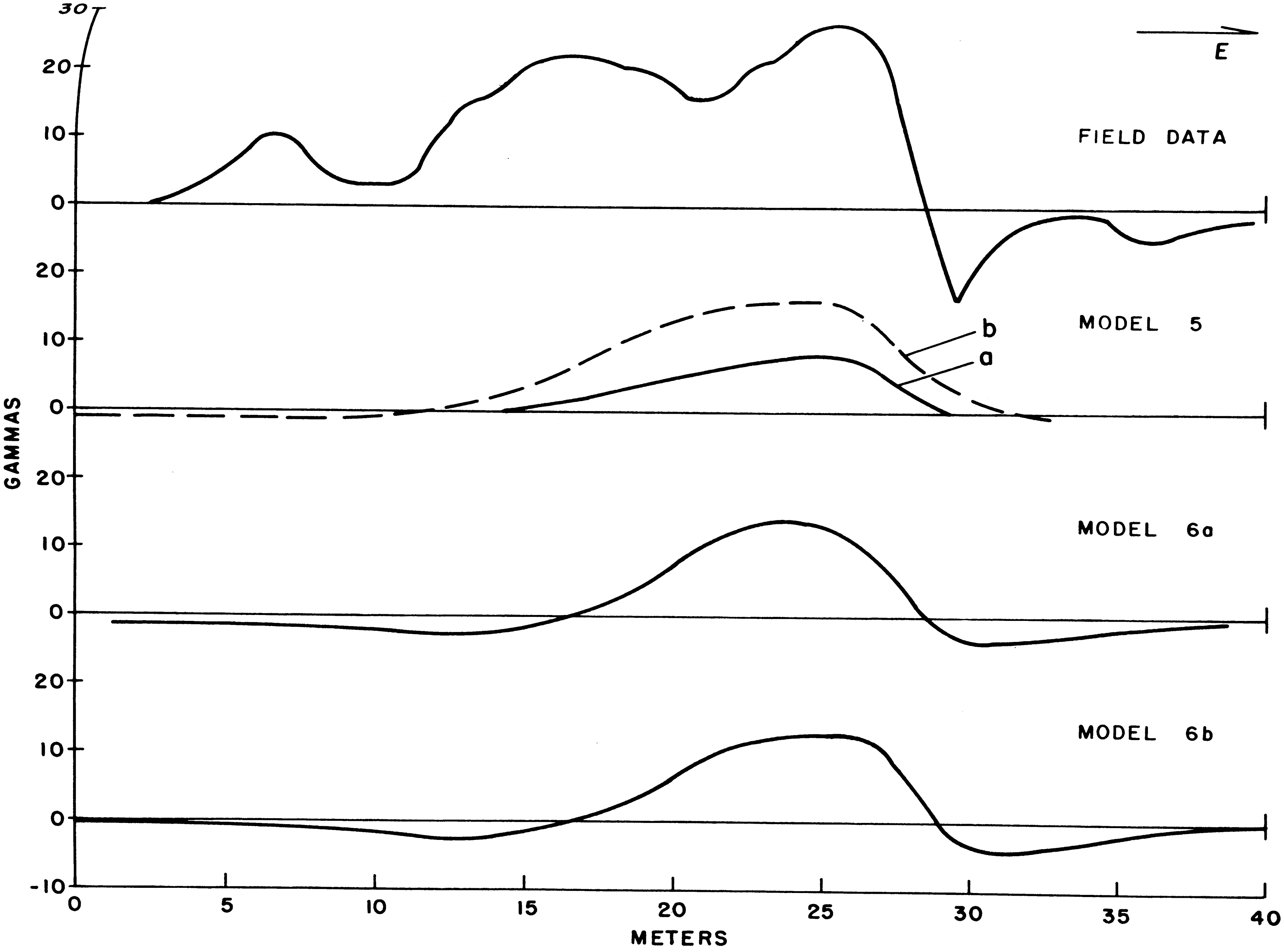

MAGNETIC PROFILES A-A'

Figure 19

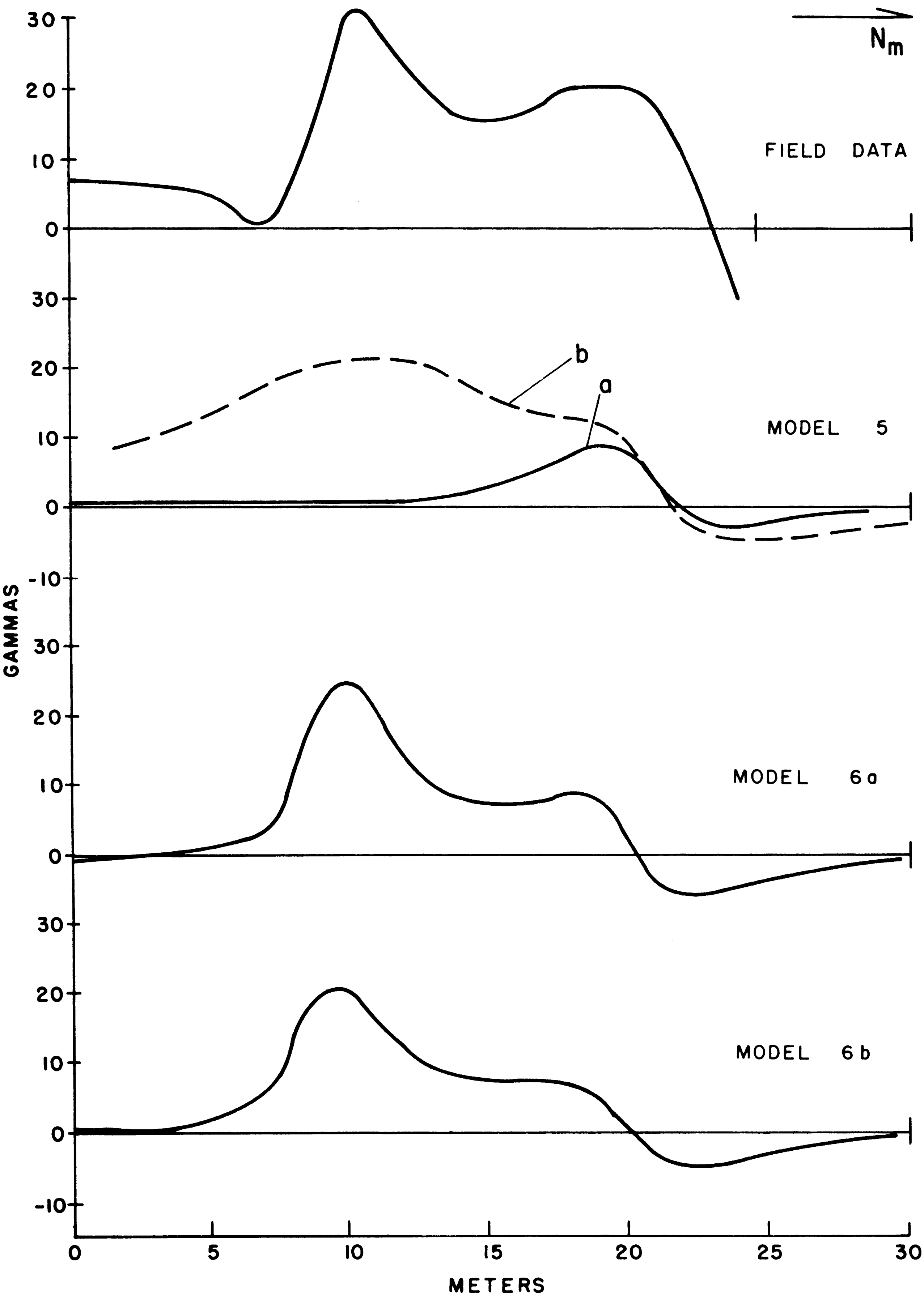

MAGNETIC PROFILES B-B'

Figure 20

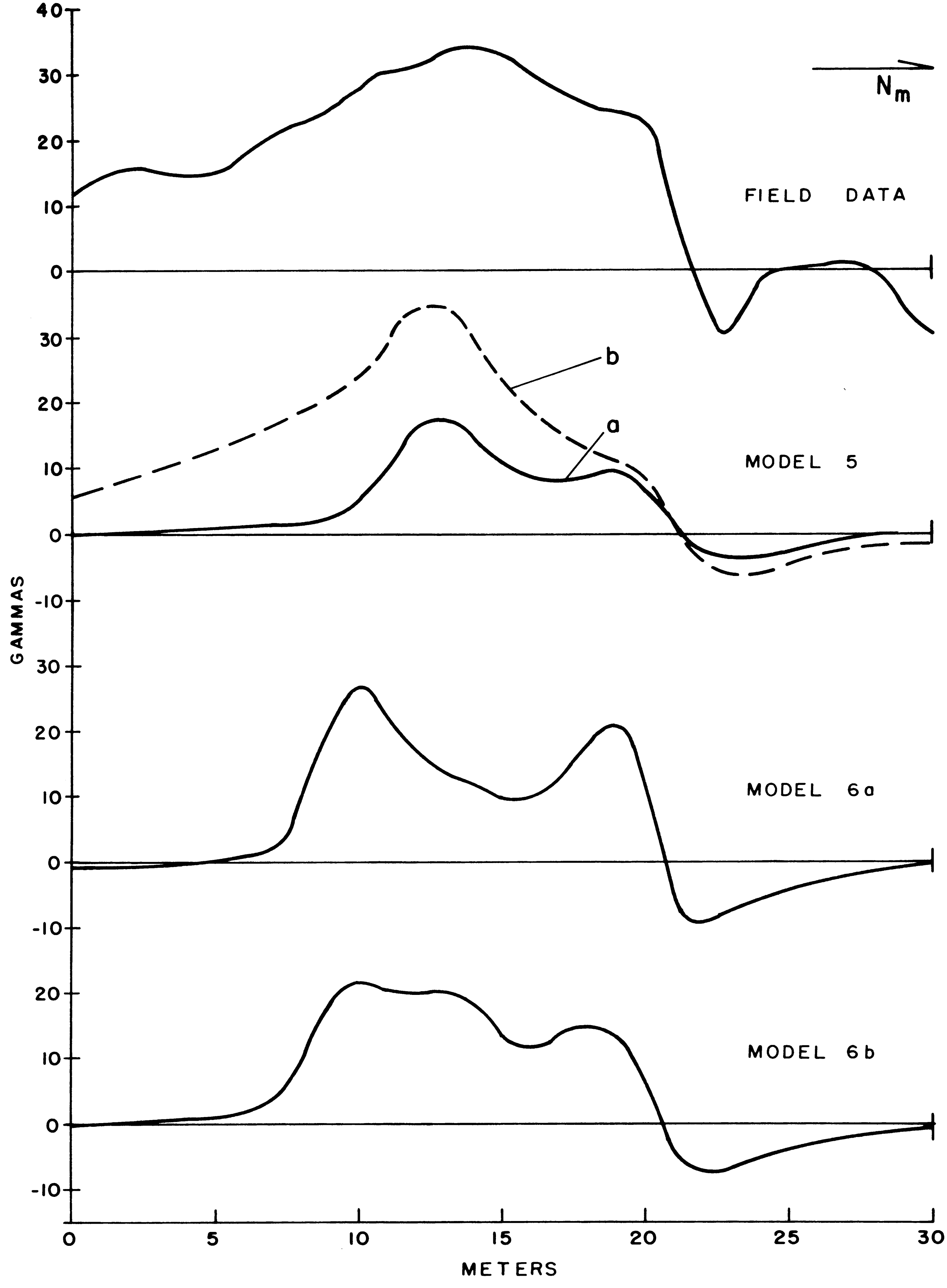

MAGNETIC PROFILES C-C'

Figure 21

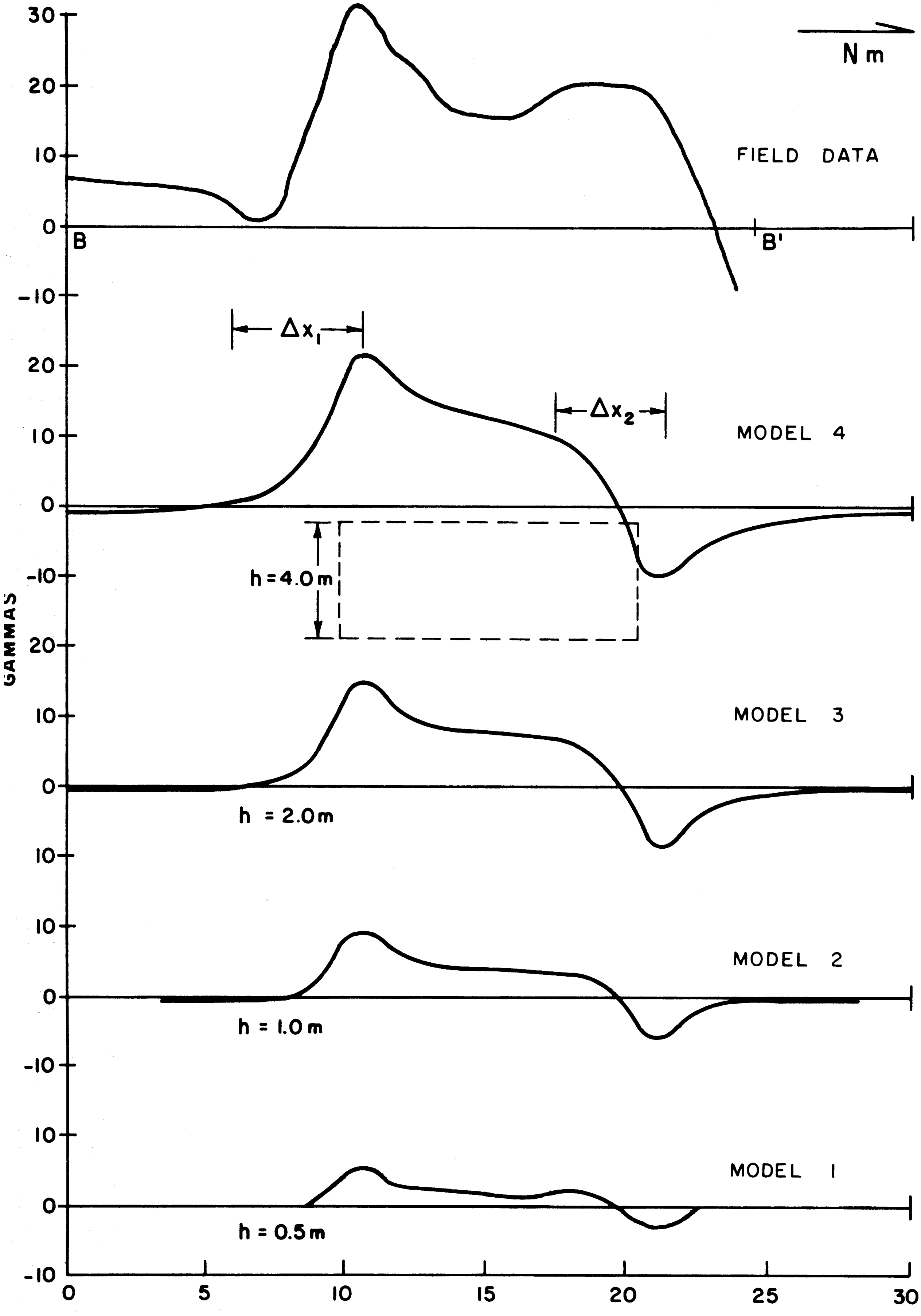

MAGNETIC PROFILES B-B'
SLAB MODELS

Figure 22

PLATE 1

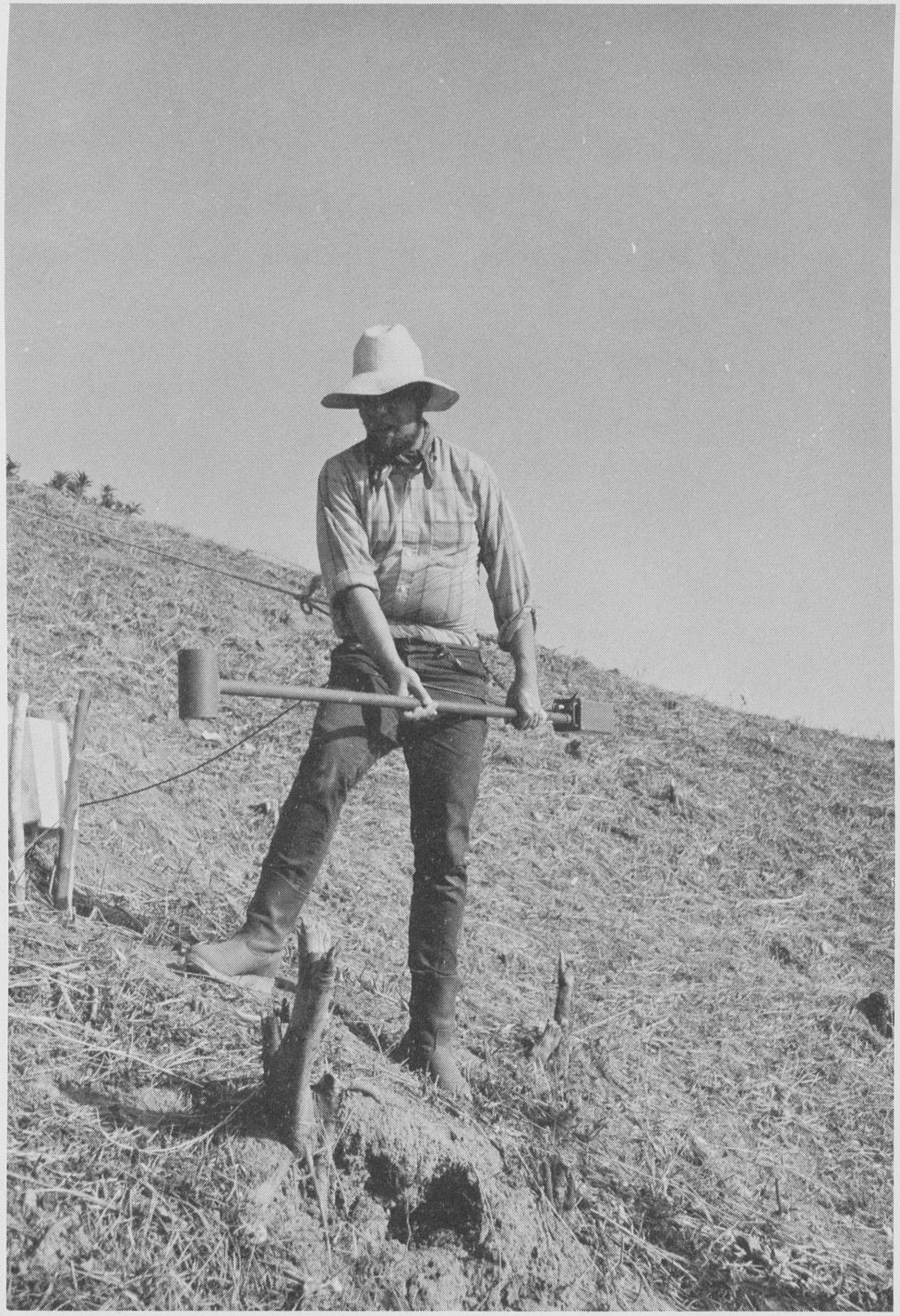

PLATE 2

PLATE 3

PLATE 4

PLATE 5

PLATE 6

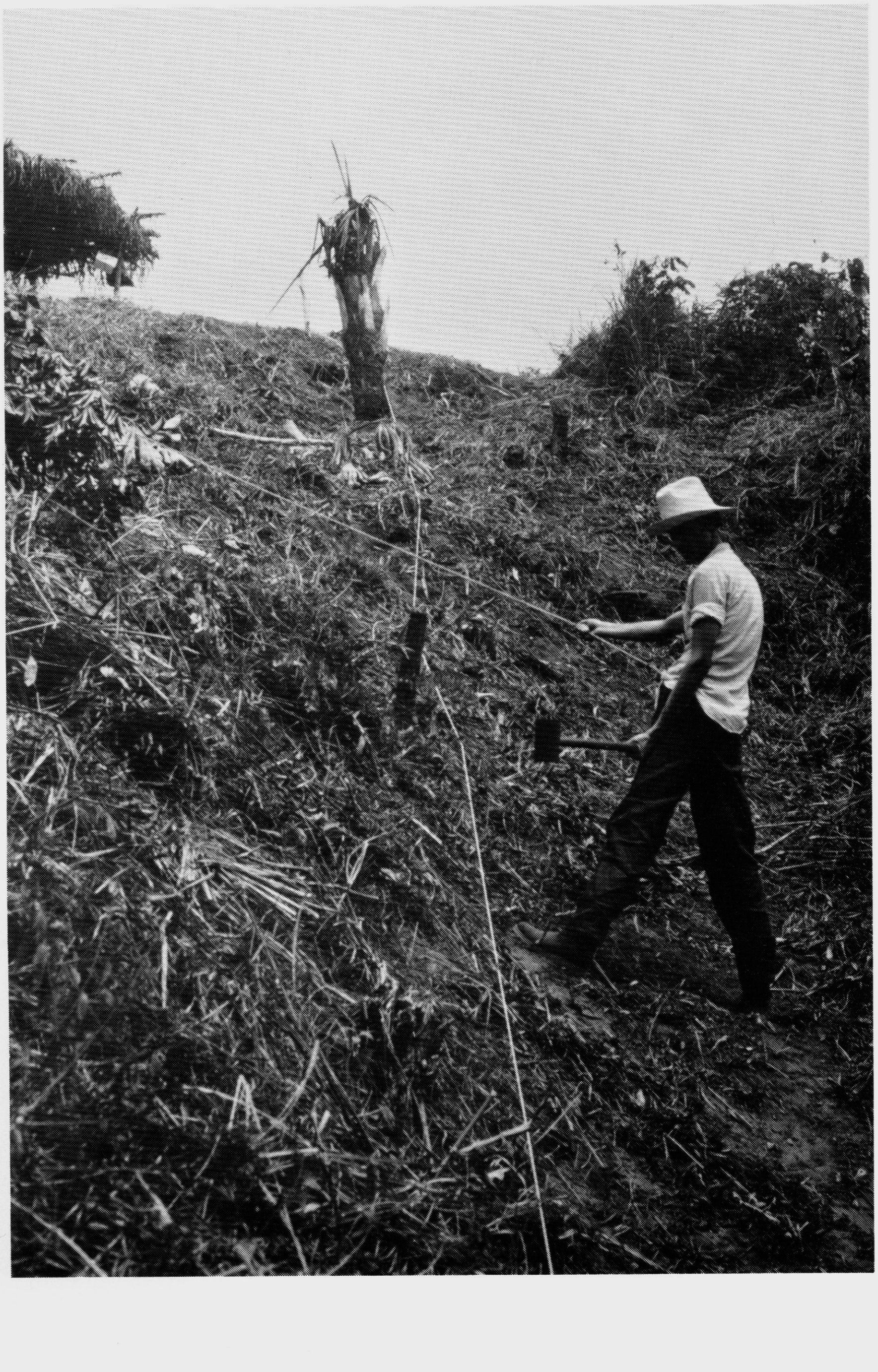

PLATE 7

ROVING SENSOR POSITIONED AT 3 M MARK ON WHITE CORD

BIBLIOGRAPHY

Aitken, M. J.
1961 Physics and Archaeology. Interscience Publishers, Inc., New York.

Bernal, Ignacio
1969 The Olmec World. University of California Press, Berkeley.

Bhattacharyya, B. K.
1964 Magnetic Anomalies Due To Prisim-Shaped Bodies with Arbitrary Polarization. Geophysics, 29:4:517-531.

Breiner, Sheldon
1965 The Rubidium Magnetometer in Archaeological Exploration. Science, 150:3693:185-193.

Cook, J. C. and S. L. Carts
1962 Magnetic Effect and Properties of Typical Topsoils. Jour. Geophys. Research, 67:815-828.

Drucker, Philip
1952 La Venta, Tabasco: A Study of Olmec Ceramics and Art. Bureau of American Ethnology, Bulletin 153, Washington, D.C.

Drucker, Philip, and Robert F. Heizer
1965 Commentary on W. R. Coe and Robert Stuckenrath's Review of "Excavations at La Venta, Tabasco, 1955". Kroeber Anthropological Society Papers, 33:37-70. Berkeley.

Drucker, Philip, R. F. Heizer, and R. J. Squier
1955 Excavations at La Venta, Tabasco, 1955. Bureau of American Ethnology Bulletin 170, Washington, D.C.

Heizer, R. F.
1968 New Observations on La Venta. Dumbarton Oaks Conference on The Olmec (E. Benson, ed.), 9-40. Washington, D.C.

Heizer, R. F. and P. Drucker
1968 The La Venta Fluted Pyramid. Antiquity, 42:165:75-98. England.

Heizer, R. F., P. Drucker and J. A. Graham
1968 Investigaciones de 1967 y 1968 en La Venta. INAH Boletin, 33:21-28. Mexico.

Heizer, R. F., J. A. Graham, and L. K. Napton
1968 The 1968 Investigations at La Venta. Contributions of the University of California Archaeological Research Facility, No. 5:127-154. Berkeley.

Le Borgne, E.
1955 Susceptibilité magnétique anomale du dol superficiel. Ann. Geophysics, 11:399-419.

Rainey, F., and E. K. Ralph
1966 Archeology and Its New Technology. Science, 153:1481-1491.

Ralph, E. K., F. Morrison and D. P. O'Brien
1968 Archaeological Surveying Utilizing a High-Sensitivity Difference Magnetometer. Geoexploration. 6. (1968), 109-122.

Slichter, L. B.
1942 Magnetic Properties of Rocks. Handbook of Physical Constants, (F. Birch, ed.), Geol. Soc. American Spec. Paper 36, 1942.

Stirling, Matthew W.
1943 Stone Monuments of Southern Mexico. Bureau of American Ethnology Bulletin 138, Washington.

Stuart, G. E. and G. S. Stuart
1969 Discovering Man's Past in the Americas. National Geographic Society, Washington.

Williams, Howel, and R. F. Heizer
1965 Sources of Rocks Used in Olmec Monuments. Contributions of the University of California Archaeological Research Facility, No. 1:1-39. Berkeley.

II. THE ARCHAEOLOGICAL SEQUENCE AT SAN LORENZO TENOCHTITLÁN VERACRUZ, MEXICO[1]

Michael D. Coe

The results of excavations conducted by Yale University in 1966, 1967, and 1968 at the complex of sites known as San Lorenzo Tenochtitlán, in southern Veracruz, have thrown an entirely new light on the early rise of Olmec civilization in Mexico (Coe, 1968). For the first time, the monumental sculptures of basalt for which the civilization is noted have been placed in an archaeological context, in this case several centuries earlier than previously suspected. However, while the San Lorenzo Phase, during which most of the monuments at San Lorenzo Tenochtitlán were carved, marks the apogee of cultural development in the area, the archaeological sequence is very long and complex, especially for the Formative Period.

This sequence is principally based upon extensive stratigraphic excavations carried out at the site of San Lorenzo itself, although a great deal of testing was done at the lesser site of Tenochtitlán, lying along the Río Chiquito only 2.5 kilometers from San Lorenzo; these produced 751 ceramic lots from 115 discrete cuts, all of which have now been analyzed. In addition, there are 17 radiocarbon dates available (to be discussed in Radiocarbon). Since some rather close resemblances can be seen from time to time with certain ceramic chronologies elsewhere in Mesoamerica, the final sequence for San Lorenzo Tenochtitlán which will be presented here is reasonably accurate.

Ojochi Phase

The Ojochi Phase is the first occupation which we have been able to detect for San Lorenzo Tenochtitlán. On the basis of its stratigraphic position underneath deposits of the Bajío Phase, and because of its obvious cultural ties with the Barra and Ocós Phases of the Pacific Coast of Guatemala and Chiapas (Green and Lowe 1967: 97-106; Coe 1961), Ojochi probably begins shortly after 1500 B.C. and lasts until about 1350 B.C. We have found Ojochi materials only at San Lorenzo itself, and even there it is highly localized, being pretty much confined to the center of the site, although an important deposit was found below Monument 20 on the edge of the Northwest Ridge. As far as can be seen, the Ojochi colonizers established a small settlement on top of the sterile yellow, orange, and red stratified sands that underlie all cultural deposits on the San Lorenzo plateau, but did not significantly alter its shape by any large-scale construction.

---

[1] Paper read at annual meeting of the Society for American Archaeology, Milwaukee, May 1, 1969.

Thin-walled tecomates are the dominant pottery shape, but flat-bottomed bowls with outflaring sides and narrow-necked bottles also occur. As in Ocós, the most striking ware is slipped in a deep hematite red which may be specular; red tecomates often are fluted, while on the bowls extensive gadrooming may occur. Other wares include red on burnished buff, the red being confined to zoned bands on rim and body; red-on-cream, with red bands appearing on the neck and body of bottles; plain burnished; and a burnished flesh-colored pottery. Quite frequent are coarse tecomates with red rims and red-striped exteriors.

The very important Camaño Coarse is a tecomate type which starts with Ojochi, where it is generally thin-walled and seldom brushed, and continues with various modifications until the Middle Formative Nacaste Phase. That this is a utility ware can be seen by the charred food material (perhaps overcooked corn dough) which occurs on many interiors.

The whole feeling of Ojochi pottery is so close to that of Ocós that it must be a kind of country cousin of that more spectacular culture. However, many Ocós decorative techniques --- such as iridescent painting and cord-marking --- seem to be absent. Only one worn, shell-edge rocker-stamped sherd was found, in contrast to the fully developed stamping complex shown in Ocós. The corpus of Ojochi decoration is restricted to fluting; gadrooning; fingernail gouging; stick-punching; zoning; and stick-burnishing in vertical lines or latticework patterns.

The artifact sample is small. A few pottery figurine fragments, both solid and hollow, were recovered, one showing the lower part of a person seated tailor fashion. Stone bowls and metates were manufactured from basalt, and ferrous pieces of laminar sandstone used as grinding or lapidary tools. Grey obsidian was imported from an unknown source, but only small flakes and chips were found; the absence of blades is a striking feature of Early Formative lowland sites that has been noted elsewhere. Red hematite pigment was also imported, perhaps from deposits in the Isthmian region.

There is obviously nothing very Olmec about Ojochi. Its closest affiliations seem to be with the Pacific Coast of Chiapas and Guatemala, but an Ocós-like occupation has also been discovered at San Blas in Nayarit (Joseph Mountjoy, personal communication). There may be a widespread occupation of both coasts of Mesoamerica which is of this type.

Bajío Phase

Radiocarbon dates suggest a placement for the subsequent Bajío Phase at 1350-1250 B.C. However, in attempting to correlate Bajío with other ceramic complexes in Mesoamerica we are faced with some real quandries which will be mentioned later. It was a particularly important occupation for the site of San Lorenzo, for we know that at this time vast quantities of fill were added to level off the top of the plateau, and more particularly

THE SAN LORENZO TENOCHTITLÁN SEQUENCE AND MESOAMERICA

		San Lorenzo Tenochtitlán	La Venta	Central Chiapas	Guatemala-Chiapas Coast	Oaxaca	Valley of Mexico
Early Post-Classic	1200-						
	1100-	Villa Alta		Ruiz (XI)		Monte Albán IV(?)	Toltec
	A.D.						
	900-						
XXXXXX	XXXXXX	XXXXXXXXXXXXXX	XXXXXXXXXXX	(Hiatus)	XXXXXXXXXXXXX	XXXXXXXXX	XXXXXXXXXXX
Late Formative	300-	Remplás		Guanacaste (V)	Crucero	↑	Ticomán
	B.C.	XXXXXX?XXXXXX					
	400-						
Middle Formative	500-	Palangana	Phase IV	Francesa (IV)		Monte Albán I	Atoto-Cuautepec (ZACATENCO)
	600-	XXXXXXXXXXXXX XXXXXXXXXXXX			Conchas 2		Totolica-La Pastora
			Phase III				
	700-	(Hiatus)		Escalera (III)			
		XXXXXXXXXXX XXXXXXXXXXX	Phase II				
	800-	Nacaste		Dili (II)	Conchas I	Guadalupe	Iglesia-El Arbolillo
Early Formative	900-	San Lorenzo B			Jocotal		
	1000-	- - - - - -	Phase I				
		San Lorenzo A		Cotorra (I)	Cuadros	San José	Ixtapaluca
	1200-	Chicharras					
	1300-	Bajío				Tierras Largas	
	1400-	Ojochi ?			Ocós	Matadamas	
					Barra		
	1500-				↓ ?		

to begin construction of the long ridges which jut out from it on the west side; perhaps all the ridges were initiated in Bajío times. If so, this is indeed strange, for since we have been able to show bilateral mirror symmetry in the ridges, it follows that San Lorenzo as a center was planned as far back as the 14th century B.C.

It is not unreasonable to suppose that this ceremonial building activity resulted in the construction of temple mounds; none have been found, perhaps because of their destruction for fill by later occupants. But we discovered, deep in an excavation on the Group D Ridge, traces of a red sand platform that rose in a series of undulating steps to a height of at least two meters.

The ceramic complex is strikingly different from that of Ojochi, although certain types of decorative modes continue. Most unusual are the large numbers of bottles which appear in Bajío, with bodies which are either fluted or deeply gadrooned to resemble gourds or squashes; necks are straight or slightly constricted towards the mouth. In addition, a very strange shape appears, one which is hardly Mesoamerican: flat-bottomed pots with constricted upper walls and enormous, outflaring rims. In wares, there is an overall drop in fine, burnished red pottery. Pottery which has been differentially fired to produce black and white areas makes its appearance. In the repertory of ceramic decoration, fluting and gadrooning continue, the gadrooning on bowl exteriors now greatly exaggerated, producing a series of swellings along rims. There is a great variety of punctation, mostly on the outside of flat-bottomed bowls with outflaring rims: semicircular (using the edge of a reed), stick, short linear, and fingernail-gouging. Some punctation is zoned in curvilinear bands and triangles. Plain bold rocker-stamping is present on the exteriors of deep, thick-walled bowls with specular red interiors. More rare is shell-back and shell-edge rocker-stamping. The culinary tecomate type, Camaño Coarse, is common but walls are gradually becoming heavier, with increasing use of brushing to roughen the pot, perhaps for ease in holding.

All of the artifact types of Ojochi continue into Bajío, including stone bowls, footless metates, and grey obsidian confined to small flakes and chips. Lumps of untempered fired clay are quite frequent, possibly as a kind of "Poverty Point" object used in boiling. One rounded lump of asphalt was found, showing that the use of this material, so important to the Olmec, begins in Bajío.

More significant than any of these, however, are the pottery figurines. Both solid and hollow types were made. One fragment of a face, decorated with red pigment, comes from a hollow figure. Another is really astonishing, for it is the left leg with attached hand of a hollow spraddle-legged baby identical in form to those usually considered typical of Olmec culture. It is unfortunate that the head of this baby is missing for it would be interesting to see if the Olmec artistic convention in faces had been developed this early.

It is difficult to relate Bajío with other more-or-less contemporary cultures in Mesoamerica, probably because we are unsure just what might be on the same time level. Tlatilco, as is well known, has a similar bottle complex, but in the opinion of Paul Tolstoy (personal communication) the graves with this material are going to be post-Olmec.

Chicharras Phase

Although there are a few continuities from Bajío into the Chicharras Phase, especially in utility wares, a host of new types and modes suggests a significant influx of ideas and/or people to join the previous population at San Lorenzo at about 1250 B.C., when, according to radiocarbon dates, Chicharras begins. The most important aspects of Chicharras, however, is that it definitely foreshadows the thoroughly Olmec San Lorenzo Phase, which follows on its heels at around 1150 B.C.

There is a tremendous increase in white-black pottery, especially white-rimmed black ware. Most of this is quite thin and extremely fine-paste, with strikingly black cores, although a coarser sand-tempered type is also frequent. Four white types also appear, all of which, along with the white-black pottery, continue into San Lorenzo. One of these, Ixtepec White, is fine-paste with black cores, while another, Xochiltepec White, is the so-called "white-clear-through" or "kaolin" ware often associated with the Olmec in the central highlands (Coe 1965a, Figs. 47, 50-54). Tatagapa Red also makes its appearance, confined to large, pure hematite-slipped tecomates; the decoration of the exteriors of these is pure incision in parallel lines, zoned crosshatching, or the very odd "false rocker-stamping" which is really incised, instead of stamped. New shapes include the necked jar, "paint dishes" (which often do contain hematite pigment), thickened-rim bowls, and heavy bowls with greatly bolstered rims.

Although "false rocker-stamping" is dominant, there is some bold plain rocker-stamping; zoned plain rocker and shell-back rocker are very rare.

In Camaño Coarse, there is a further increase in tecomate thickness and in the frequency and degree of coarseness in brushing; interior-finger-punching in these is new. Composite incensarios, the form of which is not perfectly known, appear for this type. However, a large fragment of three-pronged incensario in a plain ware is known for Chicharras.

Hollow, white-slipped figurines, often with white-black firing, are known from fragments. But Chicharras sees the first solid figurines which seem to be Olmec; these are fine-paste and "white clear through". A few heads have vaguely Olmec features. The finest depicts a seated pregnant female, unfortunately headless. Other types were being made as well, including one which always shows a hunch-backed dwarf.

The artifact complex differs in no great way from that of Ojochi or Bajío, although two-footed metates are new. We also have the first celt, of a fine-grained greenish rock, and a green stone pendant. A lucky chance of preservation of bone material in the otherwise acid soils of San Lorenzo has produced an awl and a piece of cut-turtle carapace.

The real question for Chicharras is that, granted its status as a foreshadower of the San Lorenzo Phase, were these people carving stone monuments? The answer to this is an unequivocal "yes". Basalt chips and lumps occur throughout Chicharras levels, but this is not conclusive. However, in a buried Chicharras deposit in the Group D Ridge, we hit upon a basalt fragment which must have been broken from a monument, depicting a portion of a rope-like ornament exactly like those which appear on the helments of San Lorenzo Monuments 3 and 4, both Colossal Heads. The outer surface of the original sculpture has been covered with red hematite. Whatever the form of the original monument, my own feeling is that the origins of the Olmec sculptural style will be found to be at least as early as Chicharras.

San Lorenzo Phase

A preliminary description of the San Lorenzo Phase and its dating has already appeared (Coe, Diehl, and Stuiver 1967; Coe 1968); since this marks the height of Olmec civilization in the area, the subject is of some importance. Additional radiocarbon dates from San Lorenzo itself suggest that the phase begins about 1150 B.C., rather than 1200, and lasts until 900 B.C. During this span, most of the monuments were carved; the San Lorenzo site took on something of its present appearance (although most San Lorenzo Phase mounds seem to have been demolished at a later date and used as fill); and population reached an all-time high that was not to be attained again until the Early Post-Classic. Unusual engineering projects were carried out, such as a 200-meter long system of stone drains on the west side of San Lorenzo, and the complex of artificial ponds which seem to have been controlled by such drains.

The ceramic markers for the phase are two pottery types which can only be called Olmec. Calzadas Carved largely consists of flat-bottomed bowls with outslanting or nearly vertical sides; the rims may be plain, bolstered on the exterior, or slightly everted. Exteriors were carved when leather-hard in broad gouges with sharp edges, the ends of the gouges either squared, or curved and tapered to resemble claws. The motifs on Calzadas Carved vessels show familiar Olmec elements like crossed-bands, jaguar-paw-wing, flame brows, and fire-serpent jaws. Red hematite filled the gouges and roughened areas associated with them. Calzadas Carved varies from tan to grey to black in color, with some white-rimming through differential firing.

The other pottery marker is Limón Carved-incised. In shapes, color, and firing it is identical with Calzadas Carved, but the grooved or incised designs are pretty much restricted to the opposed rotated scrolls known as the _ilhuitl_ motif.

I suspect that these decorative modes and probably even the types themselves have a very wide distribution among Olmec-influenced sites in the latter part of the Early Formative. In particular, pottery decorated like Calzadas Carved is known for Cuadros on the Pacific Coast (Coe and Flannery 1967, Fig. 39 _a_, _b_), in the San José Phase of Oaxaca (Flannery, personal communication), and at Tlatilco and Las Bocas in the central highlands (Coe 1965a, Figs. 22-34); closer to home, it is well represented at El Trapiche in central Veracruz (García Payón 1966, Pl. 23, 4-5; Pl. 24, 25). It should also be pointed out that decoration similar to that on Calzadas Carved is found on Monuments 6 and 7 at San Lorenzo, Monument 2 at Potrero Nuevo, Altar I at La Venta, and on a monument from Laguna de los Cerros (Coe 1965a, Fig. 8), indicating a close identification with Olmec ceremonial life.

Most of the other pottery types of the San Lorenzo Phase are a continuation of those known for Chicharras, but there are minor changes of mode and popularity among them. In Camaño Coarse, for instance, there is some stick-gouging in patterns like those known for Guamauchal Brushed of the Cuadros Phase (Coe and Flannery 1967; 28-20); the fine-paste, white-black types show a great decrease in frequency, with the coarser-paste types rising.

Not only Olmec pottery, but unequivocally Olmec figurines are common in San Lorenzo Phase refuse. The best of these are fine-white paste, either solid or hollow, often retouched with red pigment, and depict men and women as well as the typical baby-faces. Other Olmec figurines are fashioned from a coarse, orange-brown paste, or a medium buff paste; many are seated tailor fashion and in stance and costume recall the monuments. Certain solid figurines are definitely ballplayers, with heavy belts and wear concave objects on the chest; they are usually daubed with asphalt and stand up by means of a support at the back. Closely related to them are grotesque figurine heads, often with asphalt decoration, sometimes depicting the so-called "one-eyed god", and it is entirely possible that these are actually the heads for the ballplayers.

The artifact complex is rich and varied. In bone, we have a needle, an antler-tine husker, and bone tubes. Two-footed metates, plano-convex manos, and stone bowls of basalt are characteristic, as well as a kind of bowl with shallow, pecked depression of unknown use. Small sandstone slabs were used for lapidary work and for grinding hematite pigment, which was brought in quantity. Other mineral imports were asphalt, mica, and some serpentine (no jade is known for San Lorenzo). Ilmenite, magnetite, and hematite artifacts are particularly important, in the form of multidrilled beads and mirrors, at least one of which was concave. A magnetite sliver with a groove running down one surface could easily have acted as a compass if floated on water by means of balsa wood in a gourd bowl; I carried out this experiment, and it worked.

In the obsidian and chipped stone industry, prismatic blades appear for the first time, as well as scrapers. Other innovations are projectile points, both flint and obsidian, of Shumla and Tlatilco types.

It was found possible to divide San Lorenzo into an A and a B subphase. San Lorenzo A has all the things described above. To these, San Lorenzo B adds many new elements. There is a great increase in soft-paste orange ware and in grey bowls with widely everted rims; scored rather than brushed tecomates appear; and there are many shreds from thick, mortar-like vessels of unknown function. Most significant, San Lorenzo B shows much greater involvement with other regions in Mesoamerica, most likely through increased trade contacts necessitated by the sharp production rise in local industries. Several new types of projectile points are introduced, and there is an influx of exotic obsidians, such as green, mottled red, and brown, most of which probably originated in the central highlands. We discovered not only extensive workshop areas for obsidian and brown flint, but also evidence for a stepped-up lapidary industry, which produced ear spools and beads of serpentine, schist, and other exotic materials. In fact, in San Lorenzo B refuse there is much more serpentine and schist than before.

In line with this new cosmopolitanism, foreign figurine types appear, some of them with features vaguely reminiscent of Type C heads from the Valley of Mexico.

The aftermath of this state of affairs was the destruction of Olmec civilization at San Lorenzo. While one sculpture, the columnar relief designated as Monument 42, was found at the bottom of a San Lorenzo A deposit, all of the other monuments for which we have good stratigraphic associations were discovered in a destroyed or mutilated condition, purposefully buried in a fill that can be pinned down to the very end of San Lorenzo B. This is the case with the two lines of monuments in the Group D Ridge, for instance, so that it can be demonstrated that at about 900 B.C. there was a willful but ceremonial putting away of what was Olmec following a massive act of destruction (Coe 1967); it is even likely that the fill covering these stones was in part derived from ceremonial mounds leveled at this time. The question is, who did it? At one time I leaned to a hypothesis of internal revolt. However, after a thorough analysis of the materials associated with the burial process, I felt safe in saying that the iconoclasm was at least in part connected with the arrival of peoples identified with the next phase at the site, called Nacaste.

Nacaste Phase

The Nacaste Phase sees no major constructional activity at San Lorenzo that we can detect, but house mounds were built on the Northwest Ridge at San Lorenzo and there was a major domestic settlement in the southern part of Tenochtitlán. Nevertheless, there is some evidence that the building up of the ridges enclosing the monuments, sometimes with the addition of long, low mounds on top, was the work of what may be presumed to be Nacaste invaders.

With Nacaste there is a virtual disappearance of all previous pottery types excepting the coarse tecomates and soft orange ware, and a replacement of them with several kinds of very hard pottery fired at much higher temperatures. One of these types, Camalote White, has a poor white slip on one surface, while the other type (Tacamichapa Hard) is unslipped. The obvious affiliation of this pottery is with initial early Formative phases such as Chiapa II (Dixon 1959), Conchas I (Coe 1961), and Guadalupe (Flannery 1968); accordingly, a dating of 900 to around 700 B.C. is suggested. Single and double-line breaks are found incised on rims of flat-bottomed bowls with outslanting sides, and there are cuspidors with thickened and sometimes everted rims, below which are incised parallel diagonals on vertical zones. Large tecomates may be very heavy and have bold freehand incising combined with scarped-away bands; the thinner Camaño Coarse specimens occasionally have small horizontal handles combined with interior finger-punching, as in Chiapa II (Dixon 1959, Fig. 54 a, b).

This disappearance of older Olmec patterns can be seen in Nacaste figurines, which have the large, punched eyes characteristic of the Middle Formative in southern Mesoamerica and show no Olmec features. Nevertheless, some Olmec influence is implied by a few of the stone artifacts, perhaps reflecting the augmented importance of La Venta as a bastion of Olmec culture. One of these pieces is a tiny green stone pendant incised with the face of a were-jaguar; another is a fragmentary serpentine "stiletto". Actually, some continuity of population from San Lorenzo times is suggested by the survival of not only the culinary pottery types but also by the artifact complex which is very similar to that of the San Lorenzo B subphase. For instance, the same lapidary industry with the same tools occurs within Nacaste, including the related importation of much serpentine and green schist. Green and mottled red obsidians were also being brought in, as well as brown flint and small iron-ore mirrors. A final continuity is the presence of stone projectile points, including the Tortugas, Coxcatlán, and Garyito types.

Palangana Phase

There must be a hiatus between Nacaste and the Palangana Phase which replaces it, since all of the pottery complex is completely new. Stylistc considerations lead me to equate Palangana with Chiapa IV or Francesa (Agrinier 1964: 10-33), with a time range of perhaps 600 to 400 B.C., i.e. towards the end of the Middle Formative.

The Palangana reoccupation was principally concerned with the central part of the San Lorenzo site, where all previous inhabitants must have concentrated their ceremonial activity; unfortunately, only a part of the Central Group itself is Palangana in date, but this includes especially the four-sided court flanked with mounds, lying just northwest of the principal mound, which we have called the Palangana and believe to have been a ball court, probably the earliest known for Mesoamerica.

Palangana pottery is identical with much of that from the stratigraphic tests made by Drucker at La Venta (Drucker 1952: Fig. 34, a, b; Fig. 38, f; pl. 20 a), as well as with some of the ceramics of Tres Zapotes (Drucker 1943: Figs. 20, 22, 23). Thus, the reoccupation could have come from either area. Of overwhelming frequency are open, composite silhouette bowls in tan, brown, or black; incising occurs on the angled zone of the exterior, usually zones of diagonal parallel lines enclosing areas outlined by sigmoid curves. Rim interiors sometimes have single, double, and triple lines with superior rather than inferior "breaks". Rocker-stamping, white-rimming, and other unusual forms of decoration are absent.

The interesting find of one Mars Orange trade sherd suggests a connection with the Maya lowlands during the Mamom Phase; I have found several other Mars Orange sherds in Drucker's La Venta material (now at the U.S. National Museum).

There is an impoverishment of the artifact complex, although serpentine ornaments and plaques were present. One green schist mask-like fragment recalls the central highlands or Guerrero more than it does Veracruz, while a tiny rock crystal fragment recalls the offerings of La Venta. Projectile points were still in use, one example resembling the Shumla type. The only known sculpture consists of tiny, crude turtle effigies of basalt.

Most Palangana figurines are solid, female, with peculiar triple-punched eyes. However, a few definitely Olmec heads, not like those of San Lorenzo, were recovered suggesting once again the connections with La Venta.

Remplás Phase

A recent examination of some ceramic material from San Lorenzo Tenochtitlán shows that there is an additional cultural phase present in the area, which has been named Remplás.

Remplás pottery so far is confined to the site of Tenochtitlán. An excavation (TE-Strat. I) made by Francisco Beverido in 1966 in one of the small mound plazas of that site had produced pottery that I had recognized as Formative, but different from any of the Formative complexes known to me thus far. Because the amount of diagnostic material was so little, I set it aside for further study.

However, I have recently had the opportunity to go through all of the pottery, excavated by Drucker in the 1946 season at San Lorenzo Tenochtitlán (on temporary loan to Yale from the Smithsonian Institution). Drucker's Trenches 11 and 12, although non-stratigraphic, produced quantities of the same Formative material, along with Villa Alta and San Lorenzo sherds that could be easily factored out. These two trenches were cut into the north plaza of the principal mound group at the site. Thus, there is now sufficient material for a definition of Remplás.

Most characteristic of Remplás is a type which I am calling Ixpuchuapa Black Incised. While there is one necked jar, forms are mainly composite-silhouette bowls with S-angles. The surface is polished black. Decoration is pure incision, emphasizing inverted trangles filled with parallel diagonals, often with a line extending beyond the triangle apex; single or multiple horizontal rows of scalloping; diagonal parallel lines; and curvilinear areas filled with cross hatching. Red pigment has sometimes been rubbed into the lines.

There is also a coarse ware, confined to necked jars and tecomates. The temper is coarse, rounded sand; and firing temperatures were probably quite low. The surface is smoothed, but rather bumpy and with a peculiar "leathery" feeling to the touch. Some jar necks have a horizontal rib at the rim which is painted red.

Red-slipped ware also occurs, apparently only in the form of squat, necked jars. The slip may be over the entire exterior, but also may be restricted to the lower body. There is crude post-slip incising in paralled lines, occasionally alternating with dashed lines. The overall texture and appearance of this ware is like that of coarse ware.

The only other ware identified as Remplás is white-rimmed black, quite well-made. Some of this has almost chalky-white rims, while on some other examples the rimming is quite orange in color.

As for artifacts, only a single figurine body--solid, of a pregnant female--has been identified as Remplás.

The decorated pottery bears some resemblance to that of the Palangana phase, but may be easily distinguished from it. Ixpuchuapa Black Incised is much closer to the so-called "cerámica esgrafiada" from El Trapiche (García Payón 1966: Plates 14, 15), which is undoubtedly Late Formative in date. It is also similar in its decorative motifs--but not in form--to some pottery which I have placed in a Cerro de las Mesas II phase and in a Tres Zapotes II phase--both with a possible Proto-Classic affiliation (Coe 1965b, Figs. 14a, b: Figure 17). Although it is difficult to be very exact about its placement, due to the limited material for study, I believe that Remplás is Late Formative, about equivalent in time to Guanacaste (Chiapa V), and it may follow directly on the heels of the Palangana phase.

Thus, there is no Late Formative hiatus, at least at Tenochtitlán, and it is possible that the bulk of the mound complex at that site was constructed in Remplás times. During the Villa Alta phase (Early Post-Classic), some great pits were dug down into older plazas for the placement of offerings (including pottery vessels and pyrite-incrusted mirrors), but we do not yet know the extent of Villa Alta construction at Tenochtitlán.

Villa Alta Phase

For some unknown reason, the entire San Lorenzo Tenochtitlán area was abandoned to the forest after the close of the Remplás Phase, and continued in that condition for almost 13 centuries more. About 900 A.D., following the usual correlations, a great wave of people came in to recolonize it, in the Early Post-Classic phase called Villa Alta. Since practically all villages along the Río Chiquito today are Náhuatl-speaking, it is possible that the language of Villa Alta times was also Náhuatl.

The ceramic complex is totally dominated by a fine orange pottery somewhat resembling X Fine Orange. This ware, which intergrades with a thin, fine grey pottery, usually centers upon flat-bottomed bowls with composite silhouettes and everted rims, supported by bulbous or slab-shaped hollow feet. It is much worn, but occasionally a red slip can be detected. This is accompanied by a small amount of Tohil Plumbate. Incensarios, both spiked and ladle, are very frequent.

Moldmade spindle whorls, moldmade figurines, hollow earspools, double-chambered whistles, and a number of other pottery artifacts were fashioned from the same fine orange clay. These people picked up and reused many artifacts from earlier occupations --- especially mirror fragments --- but there are some Villa Alta specializations in stone tools, such as nutstones, the use of which can be inferred from the many finds of charred palm nuts in household debris. The obsidian industry, which utilized a good deal of green Pachuca obsidian as well as the usual grey variety, focussed on blade production from cores which often had the gound striking platform typical of the Post-Classic; from these blades they fashioned small gravers which occasionally resemble the well-known Tula points.

The massiveness of this occupation cannot be overrated. Not only was the principal mound at San Lorenzo a Villa Alta product, but major parts of Tenochtitlán were constructed by these people. At times, as in the latter site, Villa Alta planners took advantage of earlier, Olmec arrangements to construct their temples, so that a place like Tenochtitlán took on the linear appearance of bona fide Olmec centers like La Venta. Luckily for us, the major Villa Alta occupation of San Lorenzo consists of only a thin veneer of debris over earlier strata.

Conclusions

We have defined an almost unbroken succession of Formative occupations at San Lorenzo Tenochtitlán from 1450 B.C. until about 750 B.C., the three final phases representing discontinuous reoccupations of the area. Within this long span, evidence has been presented of the gradual introduction of certain Olmec traits, such as typically Olmec figurines, which perhaps begin as far back as Bajío, and monumental sculpture which is as old as Chicharras. Nonetheless, we have no real antecedents as yet for the mighty cultural upsurge which we see in the San Lorenzo Phase; the primary impetus in the establishment of Olmec civilization there may well have come from some yet-undetected outside area. Nor can we fully explain the circumstances of the destruction of Olmec civilization at San Lorenzo around 900 B.C., although the bearers of Nacaste culture, who might have come from Chiapas, could have had much to do with it.

Acknowledgements

Archaeological research was carried out under the auspices of the Instituto Nacional de Antropología e Historia and was supported by National Science Foundation grant GS-715. My special thanks go to Dr. Ignacio Bernal, Professor José Luis Lorenzo, Professor Alfonso Medellín Zenil, Sr. José García Payón, and Lic. Jorge Gurría Lacroix for their aid in this project. Among those collaborating in the field work were Sr. Ramon Arellanos M., Mr. Frederick Bakunin, Sr. Francisco Beverido P., Mr. Richard A. Diehl, Mr. G. R. Krotser, and Mrs. Paula Krotser. Radiocarbon dates were provided by the Yale Radiocarbon Laboratory, directed by Dr. Minze Stuiver.

BIBLIOGRAPHY

Agrinier, P.

1964 The Archeological Burials at Chiapa de Corzo and Their Furniture. Paper of the New World Archaeological Foundation, no. 16. Provo.

Coe, M. D.

1961 La Victoria, An Early Site on the Pacific Coast of Guatamala. Papers of the Peabody Museum of Archaeology and Ethnology, Vol. 53. Cambridge.

1965a The Jaguar's Children: Pre-Classic Central Mexico. Museum of Primitive Art, New York.

1965b Archaeological Synthesis of Southern Veracruz and Tabasco. in Robert Wauchope, ed., Handbook of Middle American Indians, vol. 3, pp. 679-715. Austin.

1967 Solving a Monumental Mystery. Discovery, vol. 3, no. 1, pp. 21-26. New Haven.

1968 San Lorenzo and the Olmec Civilization. In Dumbarton Oaks Conference on the Olmec, pp. 41-71. Washington.

Coe, M. D., R. A. Diehl, and M. Stuiver

1967 Olmec Civilization, Veracruz, Mexico: Dating of the San Lorenzo Phase. Science, vol. 155, no. 3768, pp. 1399-1401. Washington.

Coe, M. D., and K. V. Flannery

1967 Early Cultures and Human Ecology in South Coastal Guatemala. Smithsonian Contributions to Anthropology, vol. 3. Washington.

Dixon, K. A.

1959 Ceramics from Two Preclassic Periods at Chiapa de Corzo, Chiapa. Papers of the New World Archaeological Foundation, no. 5. Orinda.

Drucker, P.

1943 Ceramic Sequences at Tres Zapotes, Veracruz, Mexico. Bureau of American Ethnology, Bulletin 140. Washington.

1952 La Venta, Tabasco: a Study of Olmec Ceramics and Art. Bureau of American Ethnology, Bulletin 153. Washington.

Flannery, K. V.
1968 The Olmec and the Valley of Oaxaca: A Model for Interregional Interaction in Formative Times. *Dumbarton Oaks Conference on the Olmec*, pp. 78-110. Washington.

García Payón, José
1966 *Prehistoria de Mesoamerica*. Universidad Veracruzana, Jalapa.

Green, D. F., and G. W. Lowe
1967 Altamira and Padre Piedra, Early Preclassic Sites in Chiapas, Mexico. *Papers of the New World Archaeological Foundation*, no. 20. Provo.

III. COMPARISON OF TWO UNUSUAL OLMEC MONUMENTS

C. William Clewlow Jr.

During January and February of 1968, a University of California field party under the direction of Professors Robert F. Heizer and John A. Graham conducted limited work at the Olmec site of La Venta, Tabasco. Although the main task was to accurately map the unusual pyramid (cf. Heizer, 1968; Heizer and Drucker, 1968), some site reconnaissance and a small amount of excavation was carried out and has been reported on (Heizer, Graham and Napton, 1968; Hallinan, Ambro and O'Connell, 1968). Twenty-nine new carved stone Olmec monuments were recovered and numbered (Clewlow and Corson, 1968). While several of these new pieces are highly deserving of interest by both archaeologist and art historian, the most interesting is Monument 44 (Plate Ib). Its significance, aside from its merit as a work of art, derives from its remarkable similarity to the Idolo de San Martin Pajapan (Blom and La Farge, 1926, Fig. 433; Covarrubias 1946:80), a large basalt sculpture which rested for years atop the San Martin Pajapan volcano, in the Tuxlta mountains, but now resides at the Museo de Antropologia in Xalapa, Veracruz (Plate Ia). Known from a number of published drawings and photographs, the Idolo and its remarkable recovery have only recently been fully described (Medellin, 1968). It consists of a large human figure positioned with the left leg kneeling, and the right leg in a squatting crouch. The body leans forward and the hands grip a large round bar which stretches in front of the piece. The figure displays elaborate incising, probably representing tattoos, on the thighs and upper arms. It wears an abdomen wrap which also bears incising in geometric patterns. The entire piece is 1.42 meters in height, with a maximum basal width of 93 centimeters. The portion with which the present comment is concerned, however, is the head and headdress, which together have a height of 76 centimeters.

As may be seen in Fig. 1, the head and headdress of the Idolo de San Martin may be conveniently divided into three portions. The first and lower-most is the figure of the human face, 21 centimeters high; the second, or middle, portion consists of the snarling, anthropomorphic jaguar mask, 34 centimeters high, which makes up the main part of the headdress; the final portion is a 21 centimeter high crownlike projection rising from the center top of the main headdress element. While Monument 44 from La Venta has been broken, and lacks the top crownlike element, it is interesting to note that in other respects the piece is almost exactly the same size as the equivalent portion of the Idolo. That is, the central headdress segments of both sculptures are 34 centimeters high, 28 centimeters wide at the top, and 50 centimeters in length (see Figures 1-3). The main human heads of both pieces are about 22 centimeters wide at the cheeks, and are, respectively, 27, and 21 centimeters high, the face of Monument 44 being 6 centimeters higher than that of the Idolo.

In addition to being very nearly the same size, the two pieces are strikingly similar in manner of execution. In both, the lower human face is depicted as a realistic individual with puffy cheeks, somewhat prominent jowls, and well-modeled, fleshy chins. Although both pieces are unfortunately eroded, it is possible to see that both had broad noses with subrhomboidal nasions, eyes which were executed by flattening and incising, and mouths in which the lips were slightly parted but with no teeth showing. The upper lips of both faces are bow-shaped, as is the lower lip of Monument 44 while the lower lip of the Idolo appears to be straight.

Both pieces exhibit two-part ear ornament assemblages in which the lower elements are badly eroded, cleft-headed "were-babies" (cf. Coe, 1965a, p. 752; Coe, 1965b, p. 14), such as are portrayed on the low relief panels of Alter 5, La Venta (Drucker, 1952, p. 177), and which are carried on the laps of the niche figures of Alter 5 at La Venta, and the jade priest found at Las Limas (Medellin, 1965). Immediately above these "were-baby" heads are sub-rectangular disc-like elements in which low relief incising occurs. On Monument 44 the incising, although the piece has sustained considerable damage in this area, appears to be incised representations of anthropomorphic jaguar faces which bear similarities both to the small heads which are suspended from them, and to the large anthropomorphic face consitituting the central front portion of the headdress. On the Idolo, these faces are very indistinct, appearing at first like four small ground pits within an incised ring. However, close scrutiny reveals that these are probably the badly eroded remnants of the small incised faces which once appeared there. One minor difference between the Idolo and Monument 44 is that the upper disc of the ear ornament assemblage on Monument 44 is attached directly beneath the overhanging headdress. This has the effect of raising the whole ear ornament so that the bottom of the "were-baby" faces are parallel to the bottom of the main human face. On the Idolo, the ear assemblage is suspended from the headdress on what appears to be a short, thick strap, with the result that the "were-baby" faces hang below the chin level of the main human face.

The front portion of each headdress consists of a large, anthropomorphic face with the characteristic Olmec snarl upon its lips. The eyes of each headdress face are incised around the perimeters, slanting upward toward the outside corner at a 35 degree angle to the horizontal from a broad, flat nose. The upper and lower lips of the anthropomorphic faces are both bow-shaped and parted, revealing the upper gum beneath. Fangs which are badly eroded, but which may have been depicted as bifurcate, as well as a tongue, are present on the Odolo. Monument 44 is too badly eroded to discern further mouth detail. Both faces exhibit characteristic puffy cheeks, and fleshy, well-modeled chins. Unfortunately, the top portion of the Monument 44 headdress has been broken and badly worn. However, it is reasonable to assume that the deep cleft in the top center of the forehead which is present on the Idolo also once characterized Monument 44.

On the sides, each headdress consists primarily of a number of upward and backward sweeping incisions which may represent feathers. The Idolo has seven of these on each side, while Monument 44 has ten on the right, and eleven on the left side. Below these incisions runs a thick headband containing three simply incised decorative elements which are easy to discern on the Idolo, but nearly obliterated from Monument 44 (see Figure 2).

In back, the upper portions of both headdresses terminate in four-part rectangles formed by the intersection of two perpendicular V-shaped grooves, which run through the center of this section, one vertically, the other horizontally. Below this, the headband of Monument 44 supports a slightly raised rectangular plaque within which is incised a snarling "were-baby" face, similar to those on the ear ornament discs. On the Idolo, the rectangular plaque is present, but no detail can be discerned within its borders (Fig. 3).

In addition to similarities between Monument 44 and the Idolo de San Martin in size and sculptural treatment, preliminary X-ray fluorescence analysis indicates that the basalt from which the two pieces are carved probably came from the same source (Dr. Fred Stross, Shell Development Corp., personal communciation). Although the exact basalt flow from which the pieces came has not been identified, it is certain that it is one from the Tuxtla Mountains, where Williams and Heizer (1965) have precisely located several sources of stone used in other Olmec monuments.

Robert Heizer, in his study of two low relief carved stelae from La Venta (1967:38) has suggested the possibility of "schools", perhaps consisting of a master sculptor and his apprentices, for explaining the similarities between certain pieces of Olmec monumental art. In a detailed study of the twelve known Olmec colossal heads (Clewlow, Cowan, O'Connell and Benemann, 1967:60) the same possibility was proposed. It would appear that the close similarities between Monument 44 of La Venta and the Idolo de San Martin Pajapan present additional evidence for the existence of sculptural schools within the Olmec culture.

Since no stone sculpture working area has been located at La Venta, it is probable that both the Idolo de San Martin and La Venta Monument 44 were sculptured in the Tuxtla Mountains, with one being taken to the nearby San Martin summit, and the other being transported to the La Venta ceremonial center, a distance of about 90 kilometers in a straight line, and some 135 kilometers by water. An alternative suggestion would be that one master sculpture worked both in the Tuxtlas, and at La Venta.

Medellin (1968) has indicated that the San Martin piece was last positioned atop the summit in the late Classic period. La Venta Monument 44 was recovered from a clay fill level which has been dated by the radiocarbon method at 2460±80 (UCLA-1351) and 2910±80 (UCLA-1352), and is thus certainly of Preclassic age (Heizer, Drucker, and Graham, 1968). The probable explanation for this is that the Classic period peoples in the Tuxtlas were re-using a much older piece when they placed the Idolo atop its platform on San Martin. Regardless of later usages, it appears that the two pieces are of the same relative age, and it is suggested that they may have been executed by the same master, or, alternatively, by two schools of workers who were in close contact, each familar with the work of the other.

LIST OF ILLUSTRATIONS

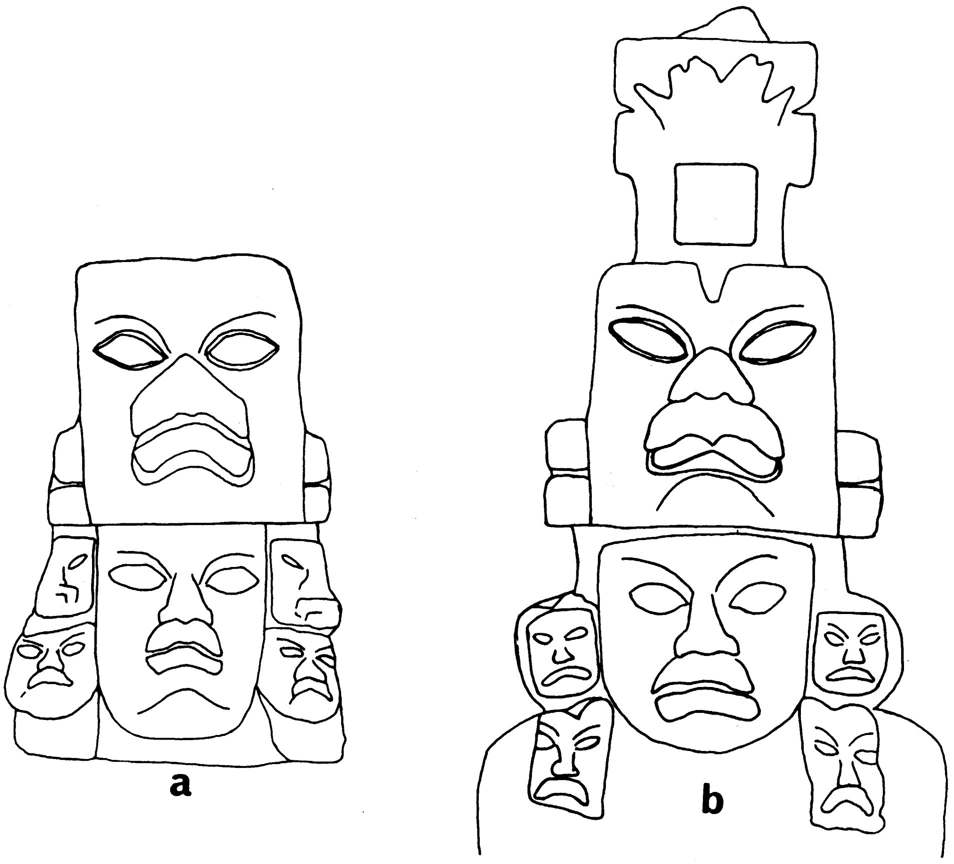

Figure 1

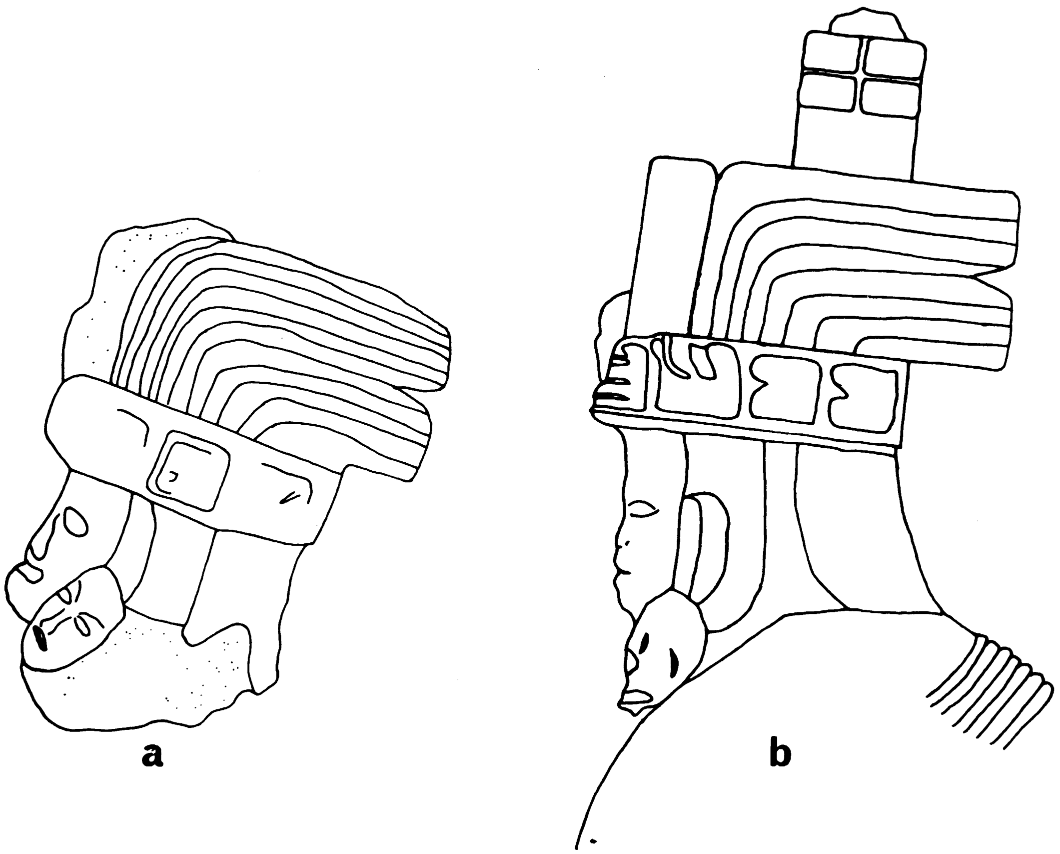

Figure 2

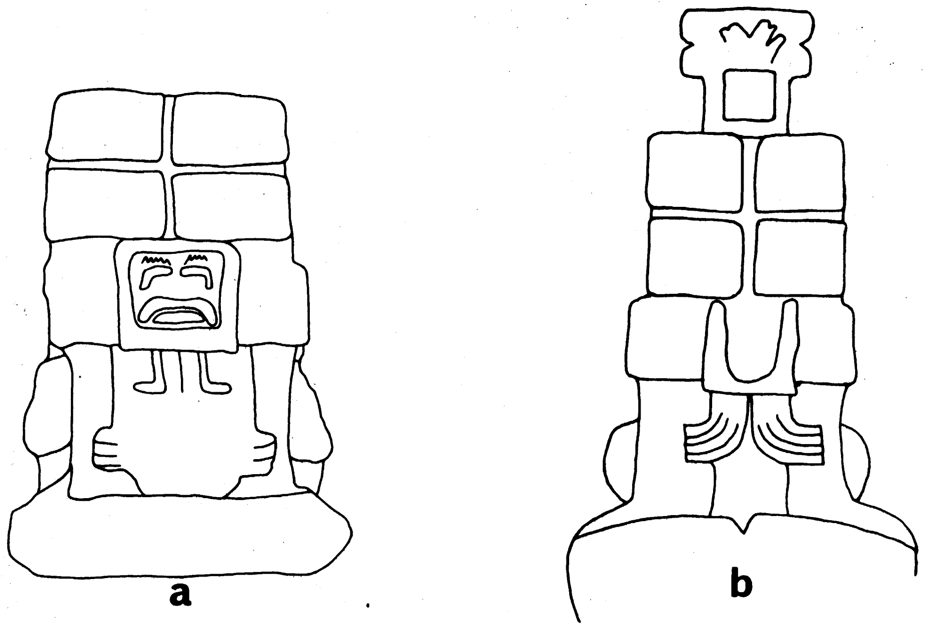

Figure 3

Plate I

a

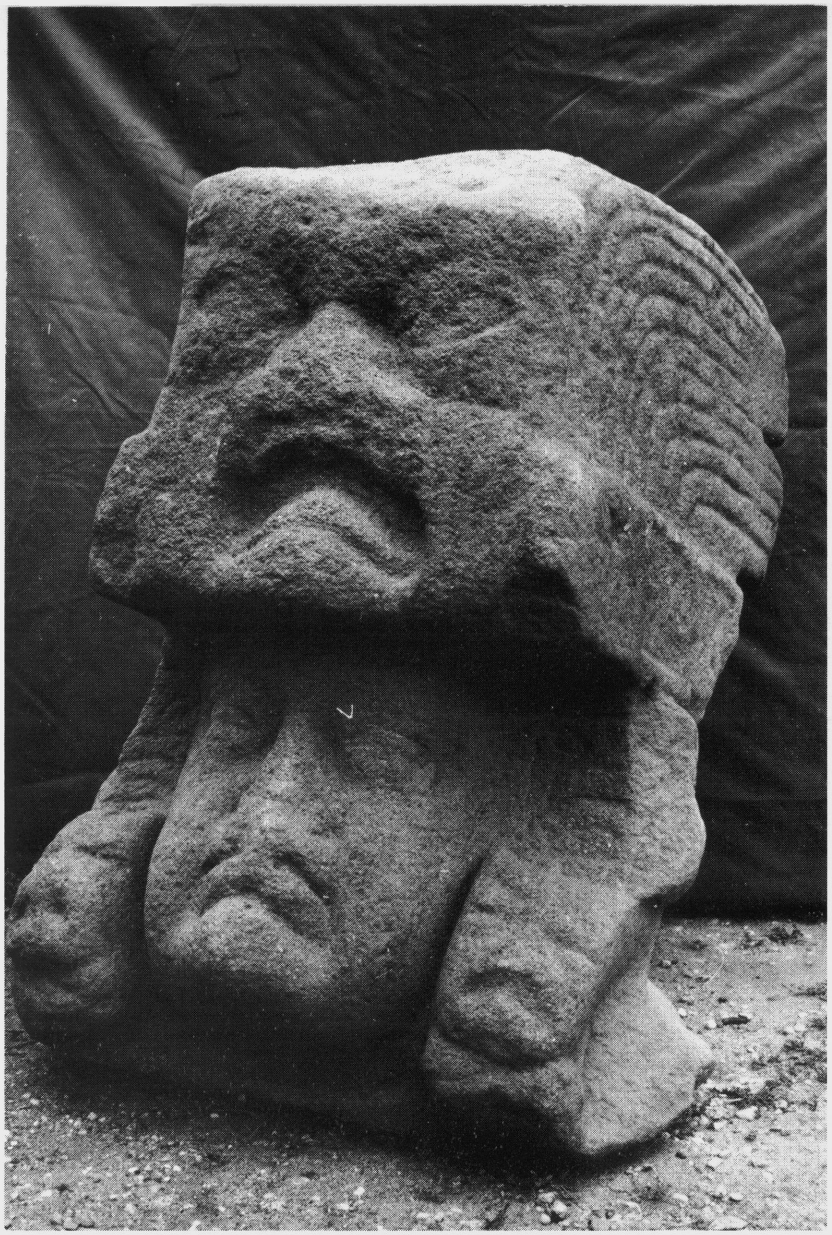

b

BIBLIOGRAPHY

Blom, F., and O. LaFarge
1926 Tribes and Temples. Tulane University Press, New Orleans (2 vols.).

Clewlow, Jr., C. W., R. A. Cowan, J. F. O'Connell and Carlos Benemann
1967 Colossal Heads of the Olmec Culture. University of California Archaeological Research Facility, Contribution 4, Berkeley.

Clewlow, Jr., C. W., and C. R. Corson
1968 New Stone Monuments from La Venta, 1968. University of California Archaeological Research Facility, Contribution 5: 171-201, Berkeley.

Coe, M. D.
1965a The Olmec Style and Its Distributions. Handbook of Middle American Indians 3: 739-775.

1965b The Jaguar's Children: Preclassic Central Mexico. Museum of Primitive Art, New York.

Drucker, P.
1952 La Venta, Tabasco: A Study of Olmec Ceramics and Art. Bureau of American Ethnology Bulletin 153, Washington.

Hallinan, P. S., R. D. Ambro, and J. F. O'Connell
1968 La Venta Ceramics, 1968. University of California Archaeological Facility, Contribution 5: 155-170, Berkeley.

Heizer, R. F.
1967 Analysis of Two Low Reliev Sculptures from La Venta. University of California Archaeological Research Facility, Contribution 3: 25-55, Berkeley.

1968 New Observations on La Venta. Dumbarton Oaks Conference on the Olmecs: 9-40, Washington, D. C.

Heizer, R. F., and P. Drucker
1968 The La Venta Fluted Pyramid. Antiquity, 42:165:52-56, England.

Heizer, R. F., P. Drucker, and J. A. Graham
1968 Investigations de 1967 y 1968 en La Venta. Boletin Instituto Nacional de Antropologia e Historia, 33: 21-28, Mexico.

Heizer, R. F., J. A. Graham and L. K. Napton
1968 The 1968 Investigations at La Venta. University of California Archaeological Facility Contribution 5: 127-154, Berkeley.

Medellin Zenil, A.
1965 La Escultura de las Limas. Boletin Instituto Nacional de Antropologia e Historia 21: 5-8, Mexico.

1968 El dios jaguar de San Martin. Boletin Instituto Nacional de Antropologia e Historia 33: 21-28, Mexico.

IV. PRECOLUMBIAN OBSIDIAN EAR SPOOLS:
AN INVESTIGATION OF POSSIBLE MANUFACTURING METHODS

Erich G. Thomsen and Harriette H. Thomsen

Antiquities are often interesting but not always esthetically satisfying. The obsidian ear spools of ancient Mexico are both; there are few important collections of precolumbian art that do not contain at least a single specimen of these fragile objects. Descriptions in the literature of obsidian ear spools, (sometimes called ear plugs) have dwelt on their beauty, their fragility, their sometimes paper-thin walls, but almost never on the significance of the technical know-how inherent in their manufacture.

The authors first became cognizant of their existence on a long-ago trip to Oaxaca, Mexico, where they pressed their noses against the vitrinas to admire the marvels of Tomb VII. Among the treasures of Tomb VII are ear spools of obsidian, rock crystal and amber, but it was the fashioning of those of obsidian which excited their interest; the technique which could have produced the apparently precise surfaces of revolution in so brittle and fragile a material.

Kidder (1947) made a summary of the then-available information on obsidian ear spools but hazarded no suggestion as to their manufacture, detailing only their fineness and delicacy. It will be seen in the subsequent pages of this paper that one of the characteristics of obsidian ear spools is their axial symmetry. It is this aspect which is the subject of the present preliminary study. The authors suggest a method for their manufacture which they prove feasible by experiments in generating such surfaces. No attempt has been made to replicate a complete ear spool, but only to demonstrate that their suggested method does in fact result in concentric surfaces of revolution yielding uniform wall thicknesses.

Ethnographic Information on Ear Spools

The usual procedure in attempting to analyze a prehistoric technique is to search for clues in the ethnographic literature. In the case of ear spools the obvious sources are the chronicles written mainly in the first century after the Conquest. If Bernal Diaz (1950) saw obsidian he does not appear to have been impressed by it, and Cortes' famous description of the Tlatelolco market (1962) in which he refers to the barbers' stalls "*donde lavan y rapan las cabezas*", (literally, "where they wash and shave the heads", but usually translated "where you can have your hair washed and cut"), is occasionally extrapolated to an interpretation that the cutting was done with obsidian razors (MacCurdy, 1900). Neither of these contemporary observers of the Conquest indicate any interest in how the material was processed, although Diaz (op.cit., p. 353) does have one brief comment on stone knives (*navajas de pedernal*). Sahagun (Dibble and Anderson, 1954, 1959, 1963; Seler, 1938), Duran (1964), Beaumont (1932, Torquemada (1723a), however, sophisticated men, not soldiers, reported randomly on the native arts. Beaumont has several references to the use of obsidian (in tarascan = tzinapo or tizinapu) in Michoacan, but no description of their manufacturing techniques, referring the reader to Torquemada. Torquemada, for his part detailed a widely-cited description of the making of obsidian blades; Torquemada's description should read in the light of discussions by Semenov (1964), Crabtree (1968) and others.

Sahagun, whose chapters on casting, lapidary - and feather work are justly famous, does not include a description of the working of obsidian. He was, however, aware of the use of obsidian in the making of ear spools. He attributes the art of the lapidary to certain deities: "Their creations were lip pendants, lip plugs, and ear plugs, ear plugs of obsidian, rock crystal, and amber; white ear plugs; and all manner of necklaces; bracelets; the manner of designing, of inlaying, with green stone; and the drilling, the polishing" (Dibble, 1959, 79-82). When Sahagun goes on to detail the methods whereby precious stones were prepared for adornments, he deals only with rock crystal, amethyst, green stones and emerald-green jade, bloodstone, Mexcian opal and several turquoises. No reference is made to the method used in the shaping, the drilling nor the polishing of obsidian; nor, in fact, to the method of manufacture of ear plugs from any of the materials.

In Sahagun's description of the costumes worn by the Aztec rulers in their various activities he describes only golden ear plugs (and a great variety of lip and nose ornaments), and a great warrior as adorned with leather ear plugs, but he describes the women as wearing "amber ear plugs, white crystal ear plugs; golden ear plugs; silver ear plugs; white obsidian ear plugs" (Anderson, 1954, 47). By indirection, therefore, we have a kind of evidence that Sahagun associated the wearing of obsidian ornaments with the female sex.

Of these three chief sources, each illustrates the role of ethnography when applied to the recreation of lost techniques: as stated, Torquemada must be viewed in the light of more modern commentators. Beaumont tells us little of practical value in the working of obsidian but some of his descriptions of funeral customs among the Tarascans have been borne out archaeologically (Rubin de la Borbolla, 1941, 1944, 1946; Moedano, 1941). It appears that obsidian ear spools were part of the grave goods in one of the multiple male burials at Tzintzuntzan[1]. Sahagun left us a heritage of immeasurable value but he gives us no clue to the making of obsidian ear spools. Only a few modern writers such as Orchard (1927, 216-221), Linne (1934, 151-2) Mirambell (1968) have speculated on the methods used in the manufacture of these remarkable objects.

Are we to conclude that the objects were well-known at the time of the Conquest but that the technique of manufacture was a lost art? The

---

1. Of the nearly 700 burials excavated at Tlatelolco, 5-6% contained obsidian ear spools. Since Tlatelolco was a temple precinct and ceremonial center the burials were generally males. The rich offerings imply that many were of warriors. (Contreras, personal communication, 1969).

little knowledge that we have of their provenience indicates that the preservation of most specimens has been in burials; are we then to assume that their use was conbined to ceremonials and interments of important people, or were they worn commonly but destined to destruction because of their fragility and brittleness?

Technology of Obsidian Ear Spool Production

A study of the processing technology of obsidian ear spools, fashioned by pre-Conquest Mexcian Indians, might well include an examination not only of the geometrical forms but also of texture and surface finish.

Obsidian is a volcanic glass primarily consisting of approximately 75% of SiO_2 , 13-15% Al_2O_3 , with smaller amounts of CaO, MgO, Na_2O , K_2O , and some trace elements (Stross et al., 1968; Weaver et,al., 1965; Heizer et.al., 1965) and less than 1% of H_2O. Its melting temperature is above 1100°C and it owes its glassy texture to the prevention of crystallization during rapid cooling. Its viscosity varies during solidification over a range of temperatures. The impurities and fine dispersion of small crystallites throughout the mass make it opaque to light when in massive section. If the sections are thin enough, however, say one millimeter in thickness as is often found with ear plugs, the obsidian becomes transparent to light and takes on the glass-like appearance of window or bottle glass. The color depends on the source from which the obsidian comes and shades of brown, green, gray, red, etc., are found (Jack and Heizer, 1968).

There appears to be no reason to accept nor discard the idea that molten glass could have been cast into suitable molds to form the initial semi-finished blank for an ear plug. Its further processing could have been by polishing with fine abrasive materials. The indigenous peoples of the High Culture area of Mexico had the capability of melting glass-like materials and could construct baked clay molds, coated with carbon to prevent fusion with the mold. Sahagun (Dibble, 1959, 73-78) gives a classic description of their casting technology of metallic objects, especially gold and silver. The fact that glass artifacts have not been found may be a clue that the casting of glass was not used.

Our own laboratory observations of volcanic glass, i.e. obsidian, confirm the general knowledge that when heated to 1100°C gases are liberated, transforming the obsidian to a pumice-like material. As far as we know there is no method by which it can be returned to its original structure, unless melted under pressure[2]. Until more information is available we will

[2] Rubin de la Borbolla (1941) cites a fragment of an obsidian ear plug as burned and bent by the effects of fire (p. 10), and also fragments of obsidian knives twisted by the heat (p. 16); blades curved presumably by the heat of cremation were found in Tlatelolco (Contreras, personal communication, 1969). We cannot know the temperatures achieved in the cremations but we must assume that they were below 1100°C. Our own experiments on Tlatelolco obsidian specimens indicate the beginning of softening at a temperature of approximately 980°C and the initiation of liberation of gases at 1050°C.

assume that the ear plugs under study are made from the original obsidian solid by mechanical processing.

If an ear plug is produced by mechanical means, it would appear, considering the tool materials available, that only two methods could have been used by the ancient lapidary for external material removal. The first method is based on the propensity of glasseous substances to fail by brittle fracture. This requires a well-placed impact with a material having sufficient hardness and mass, such as flint, or a concentrated force applied in a small region causing a high stress. In either case cores of various shapes could be produced in this manner by chipping to form rough blanks for ear plugs. Mirambell (1968, 63-69) describes the geometrical evolution of ear plug blanks as they might have been removed from the original rock. Because of the brittleness and hardness of obsidian (6-7 on the Mohs scale), it is unlikely that substantial material removal could have been achieved with harder stones such as flint by chip removal, except by pressure or impact chipping, and it must be assumed that a second method, abrasion, was the only avenue available for further material removal.

Semenov (1964) stresses the point that an examination of the surface may reveal something about the manufacturing and use of stone tools made by early lapidaries. This, even today, holds true for identifying manufacturing methods. But now, as then, it is only the last contact marks of a tool and abrasive, or wear marks, which can be observed. All previous marks imparted during the removal of substantial amounts of material will have been obliterated. Thus, fine finishing marks on a completed article may give a clue to the final process employed, but may throw little or no light on what went on before. The examination of the finish marks on ear plugs may give us some clues to the final polishing process, but will tell little about the sequence of previous operations and these must remain in the realm of speculation.

We shall now explore the possibility that the geometrical form reveals some peculiarities to use which may suggest a processing method. In order to do this the authors examined a number of ear plugs in museums located in New York, Washington, and others, examples of which are shown in Plate Ia and Ic. They found that the general form and dimensions varied and might be grouped as shown in Figure I. Inasmuch as the provenience of many of the U. S. museum pieces is not precisely known, and that they are identified only as coming from central Mexico, the authors examined and measured ear plugs in the Museo Regional de Oaxaca (Tomb VII) and in the Estado Museo Michoacan in Morelia, in order to ascertain that similarities existed.

The Mesoamerican ear plugs examined in the course of this study can be put into five classes as shown in Figure I, differing slightly from those classifications given by Mirambell (1968)[3]. Of the various ear plugs

---

[3] Mirambell's study dealt with a larger sample of ear plugs made of skarn, marble, gneiss and obsidian (14 specimens). Extensive studies of the manufacture of jade ear plug components can be found in Kidder _et al._, (1946), Smith _et al._ (1951), Lothrop (1955) and Foshag (1957).

examined, the length l, diameters d_o and d_i, and thickness t are given as examples only. Furthermore, the flange diameters d_o were sometimes of equal size but frequently varied from one side to the other. The flange thicknesses of the ear spools as well as the thicknesses of the cylindrical or conical portions were remarkably uniform and often varied by a few 0.001 inch (0.025 mm). Similar symmetry was observed in the diameters of the surfaces of revolution which show remarkable concentricity and by today's standards could be regarded as precision parts.

In the following it will be seen that this remarkable concentricity poses the problem of how such precision surfaces could have been generated by preconquest artisans. It suggests that there are two possibilities to be considered: (a) the technology was sufficiently advanced to permit the construction of equipment capable of generating precision surfaces having rotational symmetry, or (b) the method used was a primitive one which produced such surfaces and such symmetry but requiring only simple technology and skillful craftsmanship.

In the absence of archaeological evidence it is not possible to come to a positive conclusion about the process at this time. However, similar accuracies obtained in contemporary grinding and lapping processes requires equipment which must impart rotation to the workpiece about a fixed center. Such equipment, capable of retaining for sustained periods a fixed center of rotation, requires appreciable sophistication in method and material, which was apparently not available to the precolumbian lapidary of Mexico. Consequently, we shall discard the fixed-center of rotation idea and turn to one which we might call the floating-center process. The floating-center is not a new idea and is occasionally used even today in some manufacturing methods. Its principle consists of the rotation of an object in space and its subjection to dynamic forces.

Since we are going to apply the floating-center principle to the making of ear spools we shall assume that the original blank cut from the rock by chipping, string-cutting or the like, can be perforated by a drilling or grinding operation. This method consists of rotating a tubular tool such as a hollow bamboo stem or more preferably a copper tube between the outspread palms of the hands pressed together against the drill. Alternating movements of the palms moved past each other in first one direction and then the other, imparts alternating rotary motion to the drill. A similar alternating motion was used by the California Indians when rolling the drill shaft over the thigh with the palm of the flattened hand.

The end of the drill could have been provided with a dry abrasive or with abrasive and water. The removal of material consists of abrasion combined with local crushing of the surface. The rapidity of material removal depends on the factors of: relative velocities between work and tool; hardness of the tool, type of workpiece and abrasive; and among others, the pressure applied to the abrasive through the tool. This method of drilling, using abrasive materials, has been well described in the literature by the early chroniclers. Their abrasives apparently were a variety of hard powders classified under the common name of esmeril which may or may not have any specific relation to the modern natural abrasive known as emery (Sahagun, 1963, pp. 237-238).

The accuracy of the resulting perforation in large part depends on the method and the hole could have been tapered if drilled from one side and biconical if the hole were drilled from both sides. The attainment of tapered holes is a natural consequence of the use of a powdered abrasive, combined with the rotation of an inaccurately centered drill. This is undoubtedly the reason why so many of the ear plugs show biconical surfaces or concave surfaces with the inner bore being smaller at the center than at the two ends. In the few cases measured where a nearly perfect cylindrical surface was attained, it is suggested that the taper in the hole was removed by the use of a stick such as bamboo coated with abrasive. The string drive to be discussed later may also have been the method employed.

The authors believe that the rotational symmetry could have been achieved by the two-string floating-center method. This method is illustrated in Figure 3. The process consists essentially of the two elements: providing a simple drive and automatic attainment of concentricity. The obsidian blank, which has been provided previously with a central perforation, is mounted on a mandrel or shaft, as shown in Figure 2. The blank must be secured to the shaft; this could be accomplished with an adhesive such as a pitched string around the shaft at the two ends.[4] The rotation of the shaft can then be achieved by wrapping two suspended strings once or twice around the ends of the shaft and placing a weight at the bottom. Figure 3a illustrated the way in which the operator could clutch the spindle through a lap and set it in rotary motion by moving his hand up and down. The split lap held in the operator's hand surrounds the perforated obsidian blank and is provided with abrasive for the material removal action. The lap could be of wood or of a metal such as copper. A copper lap withstands tool wear better than wood and can be used for a longer period. The lap need not be close-fitting but must be replaced during the material removal process as the diameter of the workpiece decreases. A possible alternate position, utilizing a backstrap device is shown in Figure 3b. If the driving effectiveness is not good enough with the set-up shown in Figure 3a, improvement could be achieved by placing larger driving cylinders over the two ends of the shaft. This reduces the rotational speed for a given up-and down-movement, but increases the torque for overcoming lapping resistance. Furthermore, if the string has a tendency to slip during the upward motion of the operator's hand because of the reduced torque, which is due to a well-known principle in mechanics, then a teeter-totter arrangement could be provided as shown in Figures 3c and 3d. The single weight is replaced by two equal weights. This permits the weights to be lifted alternately so that one is suspended in air while the other is touching the ground, assuring equal driving torque in both directions for the lapping movement. The idea of two

---

[4] From the literature to appears that some or all of the following adhesives were available in precolumbian Mexico: pitch (Duran, 1964, p. 131); asphalt (Clavijero, 1958, p. 56); rubber and bitumen (Vaillant, 1944, p. 130); bat dung (Cabrol, 1932, quoting Hernandez).

suspended strings appropriately weighted down could have come from the weaving techniques known to have been practiced early by aboriginal peoples[5].

The second important feature of the suggested technique is that the process tends toward the production of concentricity through Newton's second law of motion, one of the important principles in dynamics. In simple terms, it states that a mass in motion (rectilinear or rotary) will persist in motion until acted upon by gravity or inertia forces. Applying this principle to the manufacture of ear spools, assuming a balanced mass system, we see that the ear spool and shaft, if rotating at, say, constant speed, would be acted upon by gravity forces and the operator's push as he moves the assembly up and down. The material removal on the outer surface of the spool would be uniform and there is high probability that initial concentricity will persist. However, if the center perforation of the spool is not initially concentric with the outer surface in contact with the lap then a small but sufficient centripetal or radial force will be produced because of the unbalance of the rotating mass. It is assumed that both the rotating spool and the stationary lap have sufficient masses to cause such a force, which will tend to abrade the eccentric portion of the surface more rapidly than it does the other. The important feature is that the correcting process is self-terminating once concentricity will have been achieved.

Experimental Procedure

The hypothesis of the early use of the two-string floating-center method described in the foregoing has little value unless it can be demonstrated to achieve the characteristics observed in preconquest ear spools. Consequently, the authors demonstrated the method experimentally.

In order to be certain of using materials similar to those suggested by early chroniclers to have been the raw materials of the native lapidaries, the authors collected obsidian from out-croppings at Zinopecuaro, State of Michoacan, Mexico. Ear plug blanks of the general geometry of Figure 1 (2) were arbitrarily selected for experiment. They were prepared by facing a rough block and removing specimens by core drilling. Diamond saws and core drills were used to facilitate the process. The outside and inside diameters were respectively 1.05 inch

---

[5] Gayton (1962, 543-552) says that ancient Mexico relied on the backstrap loom, that they may have had the fixed vertical loom, but that there is no archaeological evidence to confirm its use. MacNeish (1967) concludes that true loom-weaving was practiced in the Tehuacan Valley possible as early as 1500 B.C. (Early Formative Ajalpan period) and assumes that from about 200 B.C. (Palo Blanco period) all the major procedures of backstrap loom-weaving were undoubtedly well-known. Sahagun's list of weaving components (1954, 49) must certainly reflect the Spanish influence on techniques and equipment.

It should be pointed out that in Arizona, Woodbury (1954, 153-156) found archaeological evidence of the use of loomblocks in excavations of (Late?) Pueblo III date (1200-1400 A.D.).

(26.6 mm) and 0.5 inch (12.7 mm), and a length of 2 inches (50.8 mm). These dimensions have no significance and were chosen because of the availability of core drills. The center perforation for each blank was drilled eccentrically in order to test the hypothesis of automatic center correction during the process. The abrasive used was Boron carbide of 280 grid size. Laps of cast iron, copper and wood were used.

An example of the results obtained is shown in Plate Ib. On the right side of the photograph is seen a blank prepared by modern sawing and drilling; on the left, a specimen lapped by the two-string floating-center method. The reduction in diameter was from 1.05 inch (26.6 mm) to 0.80 inch (20.32 mm), at a rate of 0.001 inch per minute (0.025 mm per minute). In addition, two other specimens were prepared with somewhat smaller reductions.

The experimental results lead to the following conlcusions:

1. The proposed method works satisfactorily for the production of cylindrical ear spools (Type: FIgure I (2).)

2. A copper split-shell type lap gave satisfactory accuracy without requiring a close fit of the lap.

3. Dimensional accuracies over a length of 2.0 inch (50.8 mm) of ± 0.002 inch (0.05 mm) and a roundness of ± 0.001 inch (0.025 mm) could be maintained without special precaution.

4. An improvement of concentricity of 10% was achieved for a reduction of approximately 10% in diameter. The masses to achieve this result need not be large (i.e. a lap of one or two pound weight at rotary speeds of approximately 10 rev./sec.). When large reductions in diameter are required, several laps should be used in order to improve or maintain concentricity.

Acknowledgements

Grateful acknowledgement is made by the authors for aid and information provided by the following: Instituto Nacional de Antropologia e Historia, Mexico (Dr. Ignacio Bernal; Lic. Joaquin Cortina; Dr. Alfonso Caso; Otto Schondube; Eduardo Contreras, Jr.); Estado Museo Michoacano, Morelia (Prof. Jose Luis Magana; C. Alarde); Museo Regional de Oaxaca, Oaxaca (Dr. Lorenzo Gamio); Museum of the American Indian, New York (Dr. Frederick J. Dockstader); American Museum of Natural History, New York (Dr. Gordon Ekholm); Museum of Primitive Art, New York (Miss Julie Jones); University of California, Berkeley (Professor Robert F. Heizer, Department of Anthropology; Professor Ian Carmichael, Mr. Leonard L. Vigus and Mr. Robert Jack, Department of Geology and Geophysics; Dr. Albert Elsasser, Mr. Lawrence Dawson, Lowie Museum of Anthropology; Professor J. Frisch and Professor Isreal Cornet, Department of Engineering; Mrs. Elizabeth Winkler, Engineering Research Services).

List of Illustrations

Plate I Prehistoric Mexican ear plug and modern experimental reproductions

a. Pair of cylindrical obsidian earplugs (or ear spools) in Museum of Primitive Art. Left: Cat. No. 63.75a; Right: Cat. No. 63.75b. Dimensions (approximate): cylinder diameter, 22 mm; bore diameter, 20 mm; flange diameter, 27 mm; length, 34 mm. Photo courtesy of Museum of Primitive Art.

b. Experimentally made obsidian cylinders. Left: blank with eccentric center bore prepared by conventional methods. Right: external cylindrical surface of type (a) ground by the two-string floating-center method.

c. Two obsidian ear plugs in Lowie Museum of Antrhopology. Left: Cat. No. 3-10789. Right: Cat. No. 10790. Approximate dimensions of specimen 10790: cylinder diameter, 24.8 mm; bore diameter, 23.5 mm; flange diameter, 32.4mm; length, 15.9 mm; wall thickness, 0.65 mm. Photo courtesy of Lowie Museum of Anthropology.

Figure 1 Schematic diagram of some ear plug types

Figure 2 Schematic diagram of experimental set-up used by authors.

Figure 3 Illustration of possible use of the "Two-String Floating-Center grinding method"

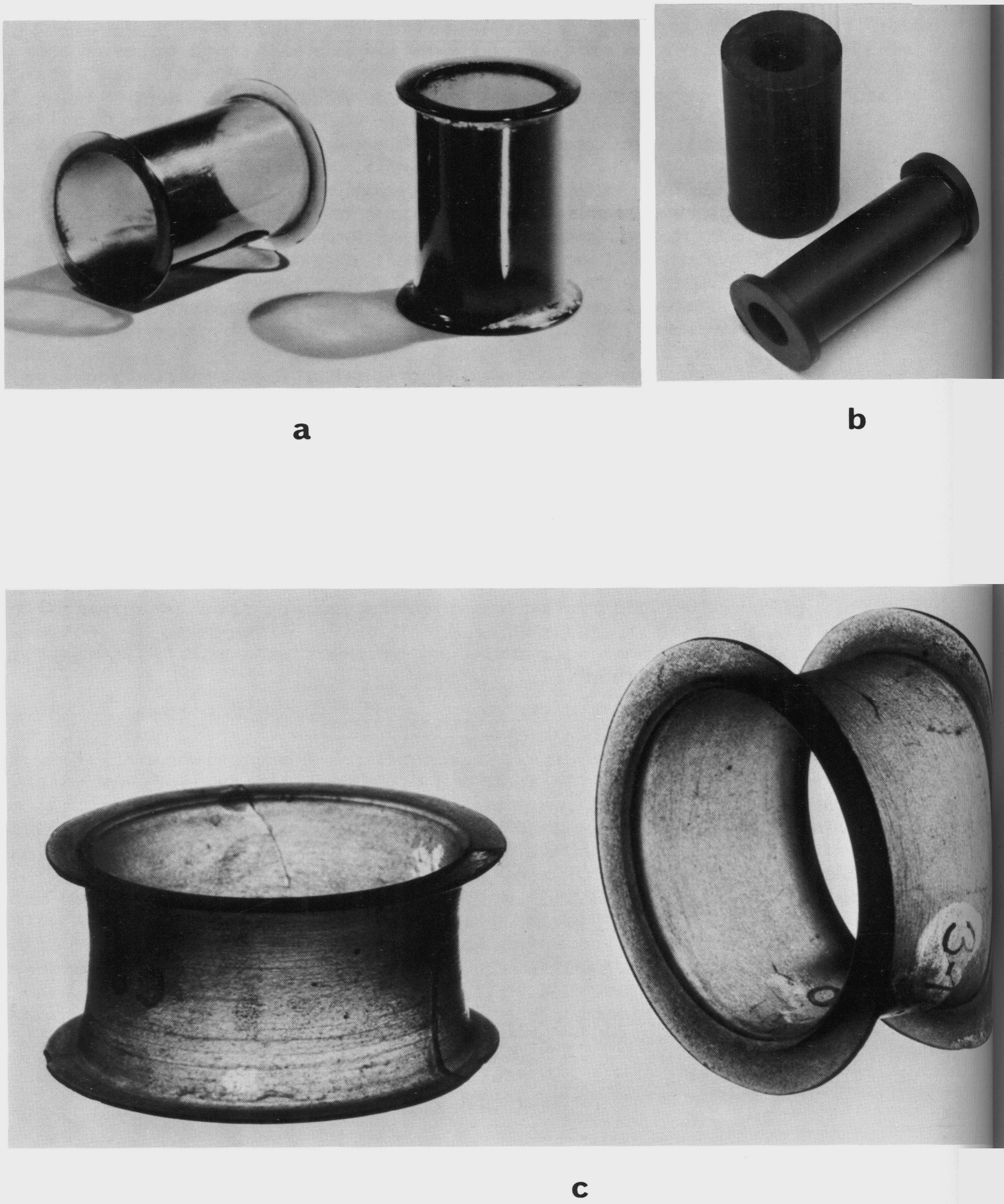
a

b

c

Plate 1

Types of Ear Spools
(not to scale)

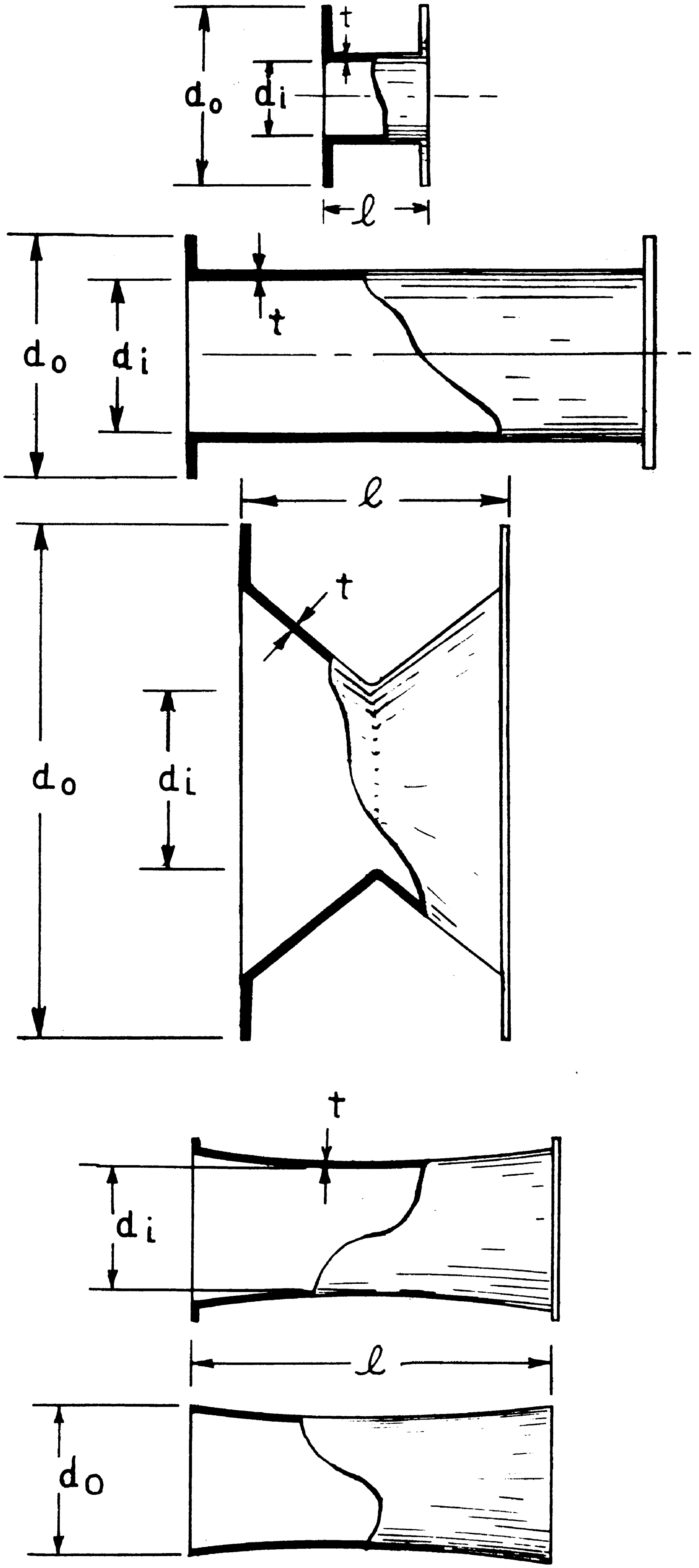

Typical Measurements
mm

	d_o	d_i	ℓ	t
(1)	17.0	7.5	7.8	1.0
(2)	27.5	20.0	34.5	1.0
(3)	57	31	23	1.1
(4)	—	54	—	1.1
(5)	24	—	25	1.5

(Measurements of fragment)

FIG. 1

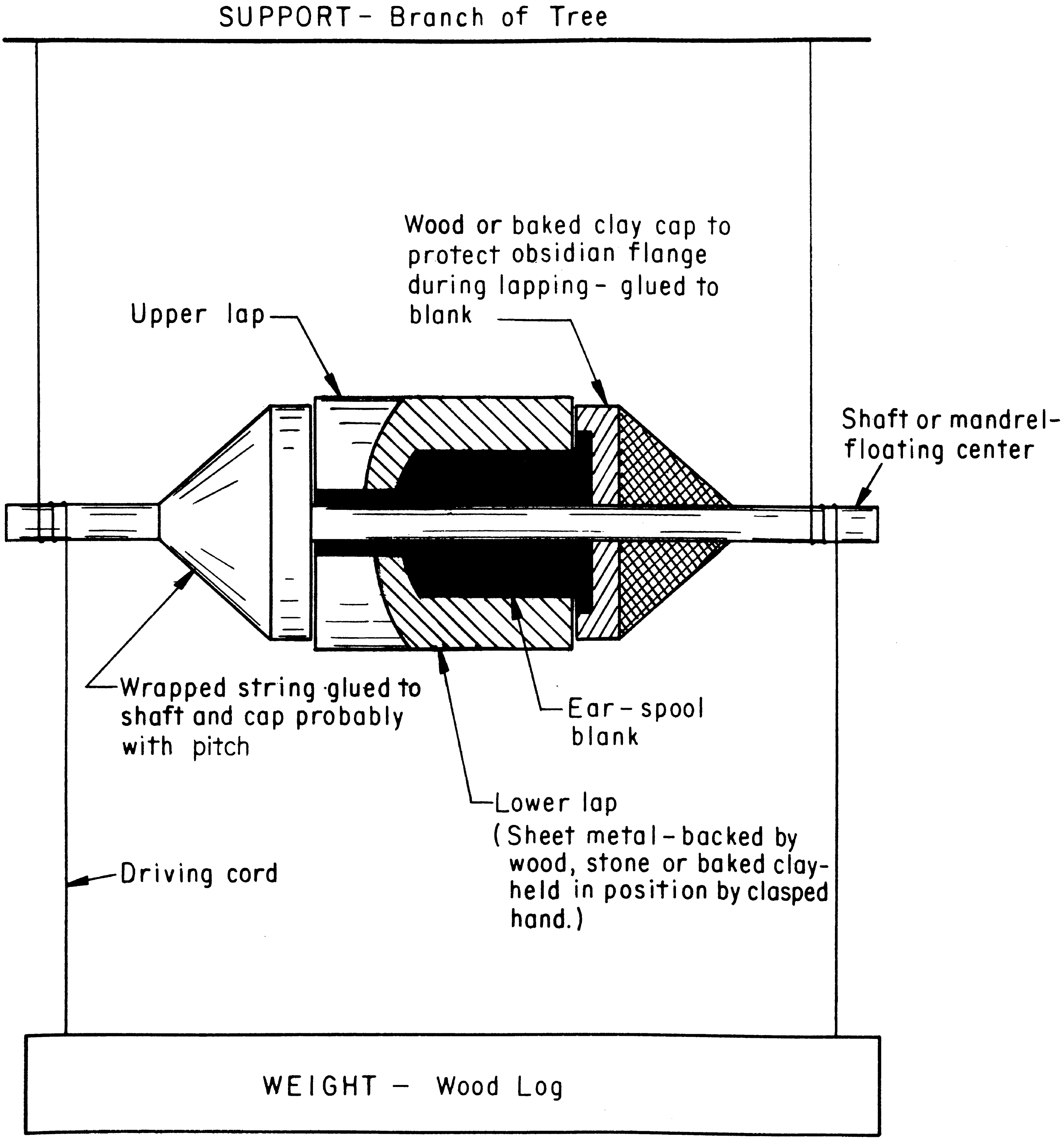
SUPPORT - Branch of Tree
Wood or baked clay cap to protect obsidian flange during lapping - glued to blank
Upper lap
Shaft or mandrel-floating center
Wrapped string glued to shaft and cap probably with pitch
Ear-spool blank
Lower lap
(Sheet metal - backed by wood, stone or baked clay-held in position by clasped hand.)
Driving cord
WEIGHT - Wood Log

FIG.2

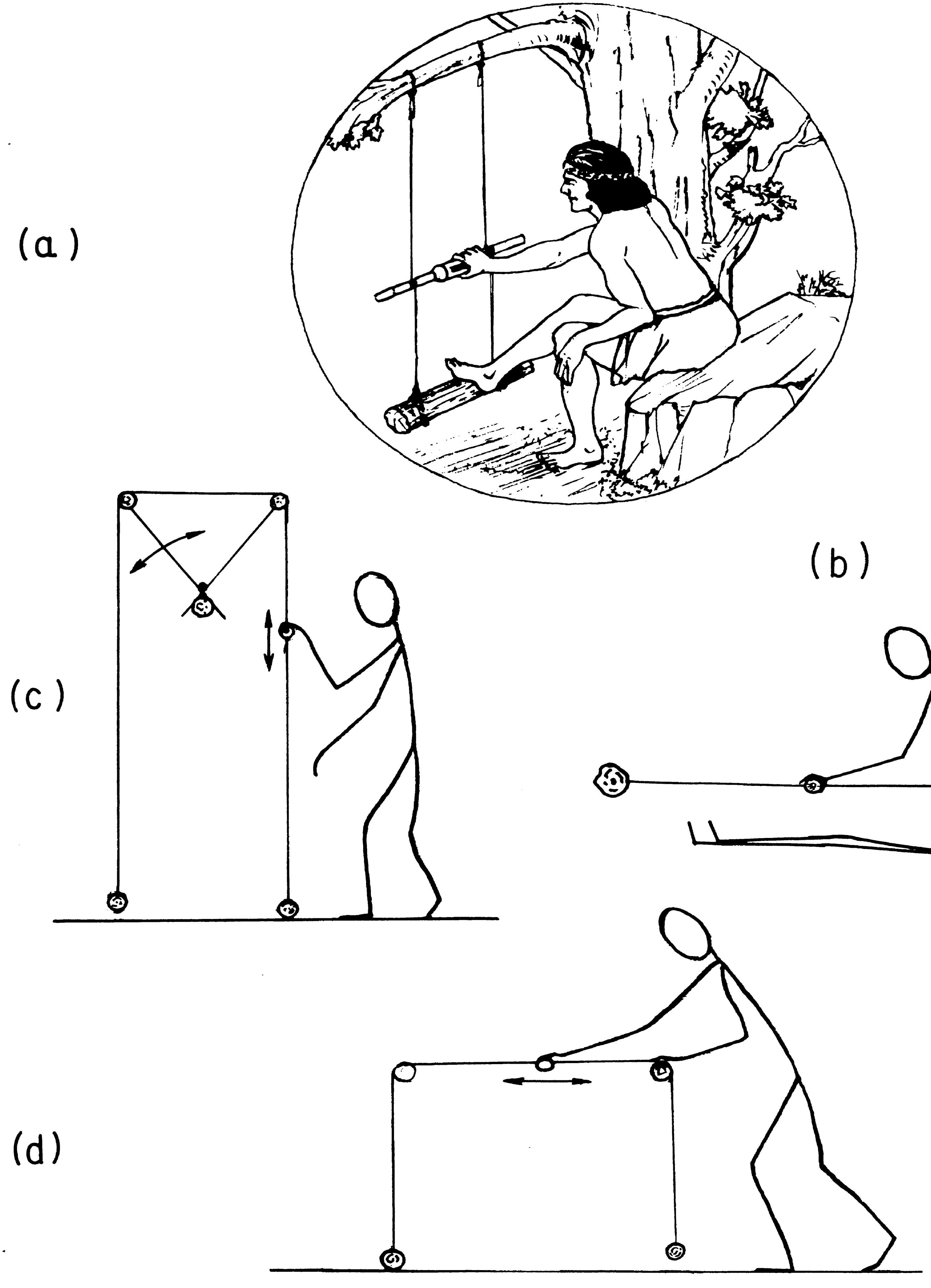

FIG_3

BIBLIOGRAPHY

Anderson, J. O. and C. E. Dibble
1954 Florentine Codex, General History of the Things of New Spain. Fray Bernardino de Sahagún, Monographs of the School of American Research, no. 14, Part IX, Santa Fe.

Barnes, S.
1947 The Technique of Blade Production in Mesolithic and Neolithic Times. Proceedings of the Prehistoric Society for 1947, New Series, vol. XIII, Cambridge, pp. 101-113.

Beaumont, Fr. Pablo
1932 Crónica de Michoacán. Publicaciones del Archivo General de la Nación, vol. XVIII, Tomo II, Talleres Gráficos de la Nación, México.

Cabrol, A. et. L. Coutier
1932 Contribution a l 'etude de la taille de l'obsidienne du Mexique. Bulletin de la Société Prehistorique Francaise, vol. 29, 579-582.

Caso, A.
1932 Monte Albán, Richest Archaeological Find in America. National Geographic Magazine, vol. LXII, no. 4, pp. 487-512.

Clavijero, F. J.
1958 Historia Antigua de México, Tomo I, Colección de Escritores Mexicanos, Editorial Purrua, Mexico.

Crabtree, D. E.
1968 Mesoamerican Polyhedral Cores and Prismatic Blades. American Antiquity, vol. 33, no. 4, 446-478.

Comptes Rendus Hebdomaires des Seances de L'Academie des Sciences, Tome
1868 67, Paris. (Rapports-Paleóethnologie, 1296 ff).

Díaz del Castillo, Bernál
1950 Historia Verdadera de la Conquista de la Nueva Espana. Tomo I, Espasa-Calpe Mexicana, México.

Dibble, E., and J. O. Anderson
1959 Florentine Codex, General History of the Things of New Spain. Fray Bernardino de Sahagún, vol. 14, Part X, Monographs of the School of American Research, Santa Fe.

1963 Vol. 14, Part XII, Monographs of the School of American Research, Santa Fe.

Duran, Fray D.
1964 The Aztecs; The History of the Indies of New Spain. Introduction by Ignacio Bernal, Orion Press, New York.

Encyclopedia Britannica
1952 p. 675B-676.

Evans, Sir J.
1897 The Ancient Stone Implements, Weapons and Ornaments of Great Britain. 2nd ed. Revised, London and Bombay.

Foshag, W. F.
1957 Mineralogical Studies on Guatemalan Jade. Smithsonian Miscellaneous Collections, vol. 135, no. 5, Publication 4307.

Gayton, A. H.
1962 Hand Loom Weaving. In Encyclopedia Americana, vol. 28, 543-552.

Heizer, R. F., H. Williams, and J. A. Graham
1965 Sources of Stones Used in Prehistoric Mesoamerican Sites: Notes on Mesoamerican Obsidians and Their Significance in Archaeological Studies. Contributions of the University of California Archaeological Research Facility, no. 1, pp. 94-103, Berkeley.

Hough, W.
1893 The Columbian Historical Exposition in Madrid. American Anthropologist, vol. VI, pp. 272-273.

Jack, R. N., and R. F. Heizer
1968 "Finger-Printing" of Some Mesoamerican Obsidian Artifacts. Papers on Mesoamerican Archaeology, Contributions of the University of California Archaeological Facility, no. 5, pp. 81-100, Berkeley.

Kidder, A. V.
1947 The Artifacts of Uaxactun, Guatemala. Publication 576, Carnegie Institution of Washington.

Kidder, A. V., J. D. Jennings and E. M. Shook
1946 Excavations at Kaminal juyu, Guatemala. Publication 561, Carnegie Institution of Washington.

Kunz, G. F.
1930 Precious Stones Used by the Prehistoric Residents of the American Continent. Proceedings of the Twenty-Third Congress of Americanists, 1928, pp. 60-66.

Linné, S.
1934 Archaeological Researches at Teotihuacan, Mexico. Ethnological Museum of Sweden, New Series, Publication No. 1, Oxford University Press.

Lothrop, S. K.
1955 Jade and String Sawing in Northeastern Costa Rica. American Antiquity, vol. XXI, no. 1, pp. 43-51.

MacCurdy, G. G.
1900 The Obsidian Razor of the Aztecs. American Anthropologist, vol. 2, no. 3, pp. 417-421.

MacNeish, R. S.
1967 The Prehistory of the Tehuacan Valley. vol. 2, Nonceramic Artifacts. University of Texas Press, Austin and London.

McGuire, J. D.,
1896 A Study of the Primitive Methods of Drilling. Report, U. S. National Museum for 1893-1894.

Mirambell, L.
1964 Estudio Microfotografico de Artefactos Liticos. Publicaciones 14, Instituto Nacional de Antropologia e Historia, Departmento de Prehistoria, Mexico, pp. 5-17.

1968 Tecnicas Lapidarias Prehispanicas, Publication XIV, Instituto Nacional de Antropologia e Historia, Mexico.

Moedano, H.
1941 Estudio Preliminar de la Ceramica de Tzintzuntzan, Temporada III, 1939-1940. Revista Mexicana de Estudios Antropologicos, Tomo V. Num. 1, pp. 21-42.

Orchard, W. C.
1927 Obsidian Ear-Ornaments. Indian Notes, Museum of the American Indian, vol. IV, No. 1, pp. 216-221.

Rubin de la Borbolla, D. F.
1941 Exploraciones Arqueologicas en Michoacan, Tzintzuntzan, Temporada III. Revista Mexicana de Estudios Antropologicos, Tomo v. num 1.

1944 Orfebreria Tarasca. Cuadernos Americanos, vol. XV, no. 3, pp. 127-138.

1946 Arqueologia Tarasca. Cuarta Reunion de Mesa Redonda, El Occidente de Mexico, Sociedad Mexicana de Antropologia, pp. 29-33.

Seler, E.
1938 Historia General de las Cosas de Nueva Espana por el M.R.P. Fray Bernardino de Sahagun. Tomo V., Editorial Pedro Robredo, Mexico.

Semenov, S. A.
1964 Prehistoric Technology. Barnes and Noble, Inc., London.

Smith, A. L. and A. V. Kidder
1951 Excavations at Nebaj, Guatemala. Publication 594, Carnegie Institution of Washington.

Soustelle, J.
1937 La Famille Otomi-Pame du Mexique Central. Institut d' Ethnologie, Paris.

Stross, F. H., J. R. Weaver, G. E. A. Wyld, R. F. Heizer and J. A. Graham
1968 Analysis of American Obsidians by X-Ray Fluorescence and Neutron Activation Analysis, Papers on Mesoamerican Archaeology, Contributions of the University of California Archaeological Research Facility, no. 5, pp. 59-79, Berkeley.

Torquemada, Fray Juan de
1944 Monarquia Indiana. Tomo III, 3rd ed., Editorial Salvador Chavez Hayhoe, Mexico. (Title page reproduced says, "En Madrid en las oficinas y acosta de Nicolas Rodriguez, ano de 1723").

Tylor, E. B.
1861 Anahuac, or Mexico and the Mexicans, Ancient and Modern. London.

1878 Researches into the Early History of Mankind, and the Development of Civilization. 3rd ed. Revised, London.

Vaillant, G. C.
1944 Aztecs of Mexico; Origin, Rise and Fall of the Aztec Nation. Doubleday, Doran and Company, Inc., Garden City, New York.

Weaver, J. R. and F. H. Stross
1965 Analysis by X-Ray Fluorescence of Some American Obsidians. Contributions of the University of California Archaeological Facility, 89-93, Berkeley.

Woodbury, R. B.
1954 Prehistoric Stone Implements of Northeastern Arizona. Papers of the Peabody Museum of American Archaeology and Ethnology, Harvard University, vol. XXXIV, Cambridge, Mass.

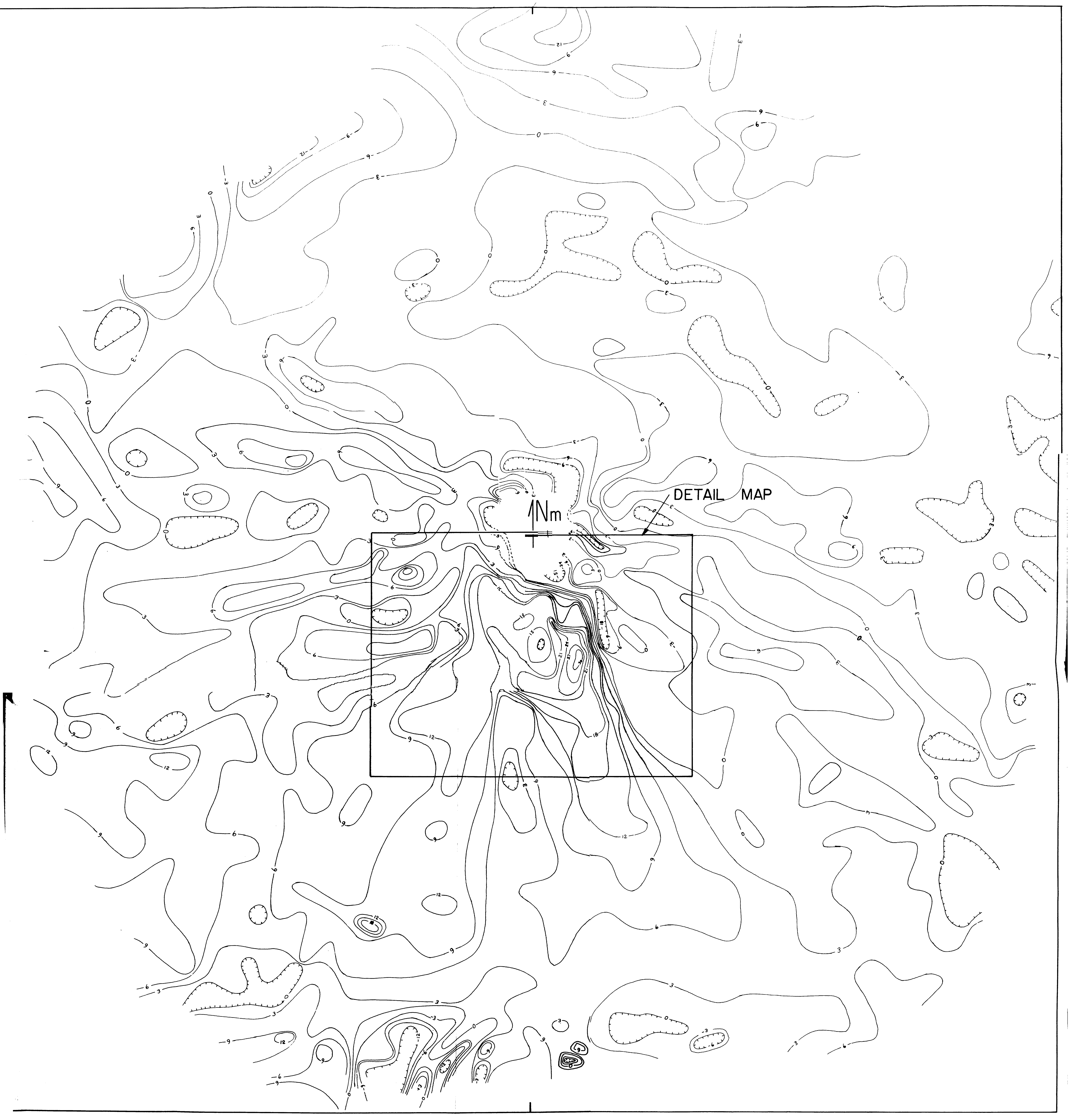

ONTOUR INTERVAL:
GAMMAS (APPROX)

LA VENTA PYRAMID
MAGNETOMETER SURVEY

Figure 3

FIGURE 3

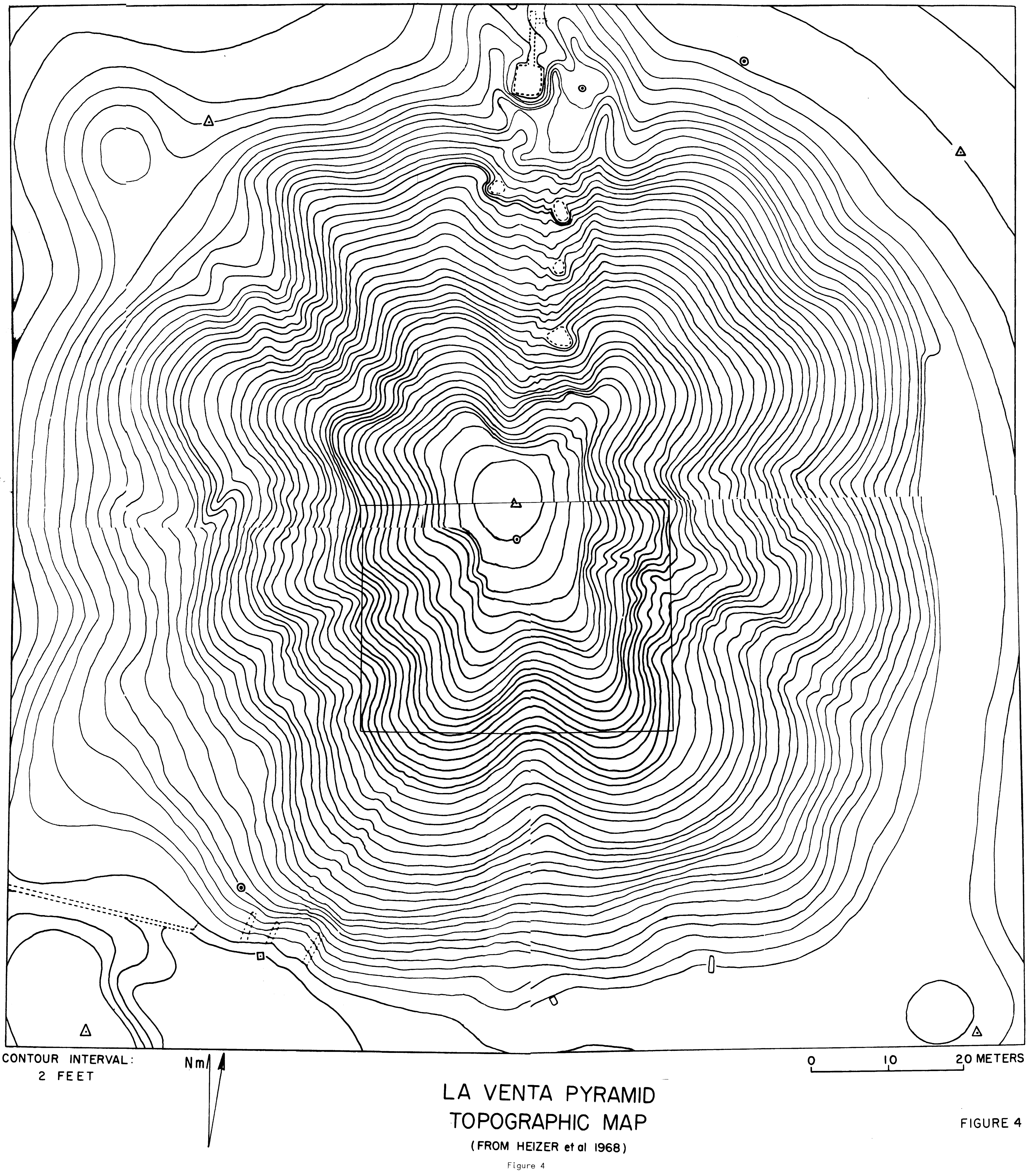

LA VENTA PYRAMID
TOPOGRAPHIC MAP

(FROM HEIZER et al 1968)

FIGURE 4

Figure 4