UC Berkeley
Dissertations, Department of Linguistics

Title
Nez Perce Grammar

Permalink
https://escholarship.org/uc/item/0fx0928s

Author
Aoki, Haruo

Publication Date
1965

eScholarship.org Powered by the California Digital Library
University of California

Nez Perce Grammar

By

Haruo Aoki

A.B. (Hiroshima University) 1953
M.A. (University of California, Los Angeles) 1958

DISSERTATION

Submitted in partial satisfaction of the requirements for the degree of

DOCTOR OF PHILOSOPHY

in

Linguistics

in the

GRADUATE DIVISION

of the

UNIVERSITY OF CALIFORNIA, BERKELEY

Approved:

M.B. Emeneau .....

Fred W. Householder .....

Mary R. Haas .....

Committee in Charge

Degree conferred.....
Date

Reproduced with permission of the copyright owner. Further reproduction prohibited without permission.

PREFACE

The field work for this study was done during the summers of 1960, 1961, and 1962 at Kooskia, Idaho, under the auspices of the Survey of California Indian Languages, Department of Linguistics, University of California, Berkeley, with the cooperation of the Idaho State Historical Society.

My thanks go to Professor William F. Shipley, who, as the chairman of the dissertation committee, encouraged and helped me from the beginning even to correcting the ever intrusive Japanese in my English; to Professor Mary R. Haas, who, as the head of the Survey of California Indian Languages, first introduced me to American Indian linguistics and has been a constant source of encouragement ever since; and to Professor Murray B. Emeneau for reading and commenting on a draft of the grammar.

My thanks also go to Professor Sven Liljeblad, for making available a valuable tape of Mrs. Agnes Moses, who was one of the last monolingual speakers of this language and died before I reached the field; to Mr.

Reproduced with permission of the copyright owner. Further reproduction prohibited without permission.

H. J. Swinney, Director of the Idaho State Historical Society, Mr. Merle W. Wells, Historian and Archivist of the same Society, Mr. Marcus J. Ware of Lewiston, Mr. and Mrs. Samuel Swayne of Orofino, Mr. William Johnston and Mr. Ladd Hamilton of the Lewiston Tribune for their kind assistance; and finally, to my teachers of the language, especially to Mr. and Mrs. Harry Wheeler and Mrs. Elizabeth P. Wilson, whose warm hospitality and rewarding friendship will never be forgotten.

While I am indebted to many in this study, the final responsibility for any errors or inconsistencies is mine alone.

Reproduced with permission of the copyright owner. Further reproduction prohibited without permission.

CONTENTS

Preface.....i

Introduction.....viii

Bibliography.....xxiv

List of Symbols.....xlviii

Grammar

Chapter 1: Phonology

100. Phonemics.....1

110. Consonants.....2

120. Vowels.....8

130. Suprasegmentals.....10

140. Phonotactics.....12

141. Syllable canon.....12

142. Prejunctural consonants and clusters.12

143. Intervocalic consonants and clusters.19

200. Morphophonemics.....37

210. Group 1.....37

220. Group 2.....42

230. Morphophonemic sequences.....43

300. Consonant and vowel symbolism.....46

Reproduced with permission of the copyright owner. Further reproduction prohibited without permission.

Chapter 2: Morphology

400. Introduction.....48

500. Substantives.....49

510. Substantive stems.....49

510.1 General noun stems.....49

510.2 Numeral stems.....58

510.3 Kinship term stems.....59

510.4 Personal pronoun stems.....64

510.5 Demonstrative stems.....65

510.6 Adjective stems.....67

520. Substantive themes.....68

521. Thematic affix classes.....68

521.1 Thematic prefix classes.....70

521.2 Thematic suffix classes.....71a

522. Thematic constructions.....74

523. Deverbative themes.....81

523.1 Deverbative themes with substantive affixes.....81

523.2 Deverbative themes with special derivational suffixes.....81a

530. Substantive inflection.....82

531. < nim > 83

Reproduced with permission of the copyright owner. Further reproduction prohibited without permission.

532. Objective.....85
533. Locative.....86
534. < ʼéyn > 90
535. Vocative.....93
536. Substantive constructions.....94
600. Verbs.....96
610. Verb stems.....96
610.1 General verb stems.....96
610.2 Copulative verb stems.....106
620. Verb themes.....107
621. Thematic affix classes.....107
622. Construction of verb themes.....126
622.1 General verb themes.....126
622.2 Copulative verb themes.....128
630. Verb inflection.....129
631. Subject and object prefixes (< hi >).....130
632. < pe· > 131
633. Plural subject prefix.....132
634. Plural object prefix.....132
635. Class marker suffix.....134
636. Number suffixes.....134b
637. Locative suffixes.....136

Reproduced with permission of the copyright owner. Further reproduction prohibited without permission.

638. Tense-modal suffixes.....137
638.1 Indicative present.....137
638.2 Indicative perfect.....137
638.3 Indicative indefinite past.....138
638.4 Indicative recent past.....138
638.5 Indicative remote past.....138
638.6 Indicative future.....139
638.7 Conditional present, perfect, past.....140
638.8 Frequentative present, indefinite past, recent past, remote past.....142
638.9 Imperative.....145
639. Inflectional suffix complex and verb constructions.....147
639.1 Inflectional suffix complex.....147
639.2 Verb constructions.....150
700. Particles.....151
710. Particle stems.....151
720. Suffixes.....153
721. Pronominal suffixes.....153
721.1 Subject suffixes.....153
721.2 Subject-object suffixes.....157
722. Plural suffix.....160
730. Particle constructions.....161

Reproduced with permission of the copyright owner. Further reproduction prohibited without permission.

Chapter 3: Syntax.....162
810. Tactic units.....162
811. Interjections.....162
812. Connectives.....162
813. Attributives.....163
814. Expanded substantive themes.....164
815. Subject and object.....168
816. Locatives.....169
817. Finite verbs.....171
820. The clause.....173
821. Derivative clause.....175
822. Dependent clause.....176
830. The phrase.....177
831. Interjectory phrase.....177
832. General phrase.....177
840. The sentence.....177
841. The minor sentence.....177
842. The major sentence.....178
850. Concord and agreement.....179
900. Text with analysis.....181
910. Phonemic transcription.....181
920. Free translation.....182
930. Analysis.....182

Reproduced with permission of the copyright owner. Further reproduction prohibited without permission.

INTRODUCTION

The Nez Perces called themselves /nimí·pu·/. The neighboring Indians[1] called them šíwaniš 'stranger,' šuk^{w}íšuk^{w}i 'dark brown' (Sahaptin dialects), sêhápten (Flathead) (Teit 1930: 300), cugádika?a 'kows eater,' sáiduka?a 'people under the tule' (Bannock), cóiga?a 'kows people' (Shoshoni), kúmunuitsitapi 'dark green or dark blue people' (Blackfoot). The whites called them Nez Perces, Pierced Noses, Chopunnish, Blue Earth Indians, Blue Mud Indians, Green Wood Indians, and Flatheads.

/nimí·pu·/ is analyzable into /nimí·/ and /pu·/. The former occurs only with /pu·/, and the latter means 'people.' Together, they mean 'the Nez Perce people.' An apparent variant numipu is also found (Spalding 1840; Morvillo 1888, 1891, 1895; Spinden 1908a: 171). Haines has Nimapu and notes that it means 'the Real people' (Haines 1955: 8).

---

[1]The following are by personal communication: Sahaptin dialects from Bruce Rigsby, Bannock and Shoshoni from Sven Liljeblad, Blackfoot from Allan Ross Taylor.

Reproduced with permission of the copyright owner. Further reproduction prohibited without permission.

šíwaniš 'stranger' is used by all the dialects of Sahaptin for the Nez Perce. Some older people, according to Rigsby, use šuk^{w}íšuk^{w}i, which means 'dark brown' or 'mahogany color' because the Nez Perces are supposed to have darker skin.

The name sêhápten and its variants are recorded by Thompson as early as 1809 (White 1950: 72). Sometimes it was to refer only to the Nez Perces (by Thompson, cf. Tyrrell 1916, White 1950); only to Northern or Northwestern Sahaptin (by Tolmie and Dawson, 1884: 78-87, who call their obviously Northern Sahaptin vocabulary "Shahaptan or Nez Percée"); or presumably for S(h)ahaptian including both Northern Sahaptin and Nez Perce.

sáiduka?a 'people under the tule' apparently refers to a Nez Perce type of dwelling, and cugádika?a 'kows eater,' and cóiga?a 'kows people' to one of their favorite foods. According to Liljeblad, sáiduka?a in Oregon Paiute means 'enemy,' 'enemies.'[2]

---

[2]That the feeling was mutual is indicated by the Nez Perce word /tiwélqe/, which at once means 'the Snake Indians (and other Uto-Aztecans),' and 'enemy.'

Reproduced with permission of the copyright owner. Further reproduction prohibited without permission.

According to A. R. Taylor, kúmunuitsitapi is analyzable into kúmunui 'dark green or dark blue' and tsitapi 'people'; the former is a possible loan from Nez Perce. Nez Perce has no word resembling kúmunui with the suggested meaning. However, the Nez Perce word /qemúynu·/ for the Wallawa band of Nez Perces (probably identical with kamúinu in Bulletin 30 of the Bureau of American Ethnology given as 'own name') may possibly be the source of the Blackfoot form.

According to Josephy (1955: 14), Nez Perce as a tribal name was coined by the French Canadians. It was first recorded in David Thompson's Journal on March 11, 1810 (White 1950: 96). The name derives from the early Nez Perce custom of wearing a dentalium shell through the septum of the nose as noted by Meriwether Lewis:

> "The orniments worn by the Chopunnish are, in their nose a single shell of Wampom, the pirl and beeds are suspended from the ears." (Thwaites 1904-5: 4.37f.)

The custom was also noted by Thompson ca. 1812 (Tyrrell 1916: 486f.), by Ross ca. 1818 (1855: 1.185), by Chief Joseph (1879: 416), by Spinden (1908a: 172), by Curtis (1911: 8.4 note 1), and by Teit (1930: 82, 147, 340). An early discontinuation of this custom was indicated by Parker

Reproduced with permission of the copyright owner. Further reproduction prohibited without permission.

(1838: 80) in an entry for August 12, 1835:

> "..., but how will those ... account for the Nes Percés being so called, since they do not pierce their noses ..."

and by Ferris (Phillips 1940: 303), who in recounting his experiences in the Rocky Mountains from 1830 to 1835, noted:

> "... there is not among the Nez-perces an individual having any part of the nose perforated."

This early discontinuation probably accounts for the view that the custom never existed and that the name is a misnomer--a view held by not a few including the authors of the article on Nez Perce in Bulletin 30. It is to be noted that Nez Perce was also used to designate the Northern Sahaptin as evident from vocabularies by Ross (1855: 1.312-323) and Tolmie and Dawson (1884: 78-87). The Anglicized Pierced Noses occurred as early as the date of Lewis and Clark's first historical encounter with the Nez Perces, September 20, 1805. Numerous variants are known including Neepercil and Nenpersaas (Henshaw and Farrand 1910: 2.67). Occasional missing of the mark is noted in Neckpercie (Henshaw and Farrand 1910: 2.67) and Oreille Percé (Coues 1897: 1.398)

Reproduced with permission of the copyright owner. Further reproduction prohibited without permission.

Chopunnish was used by Clark in 1805 (Thwaites 1904-5: 3.78). Henshaw and Farrand (1910: 2.66) suggested that this is a corrupted form of a Nez Perce word Tsútpĕli, a self-designation. Spinden (1908a: 172, note 1) suggested that it might be from a Sioux word Tsunitpelun, a possible corruption of the Nez Perce form. The present corpus bears out neither of the suggestions, nor does it offer a better one.

Blue Earth Indians and Blue Mud Indians may refer (as the Blackfoot word might) to the color and material of face paint. No explanation is available for Green Wood Indians. Blue Mud Indians was recorded by Lewis and Clark (Thwaites 1904-5: 6.106), Blue Earth Indians and Green Wood Indians by Henry (Coues 1897: 2.712), and the latter again by Thompson (White 1950: 105).

The name Flathead seems to have been used in at least three ways; (1) the ethnic group speaking a Salish language, (2) any group practising frontal deformation, (3) any tribe inhabiting the mountainous area west of the Rocky Mountains. It is possible that in the latter two applications the Nez Perces may have been included.

The practice of frontal deformation among the Nez Perces is noted by Teit (1930: 168, 381f.). Spinden

Reproduced with permission of the copyright owner. Further reproduction prohibited without permission.

(1908a: 226) refers to skeletal evidence suggesting that it may have been an ancient or occasional practice. However, the reference Chittenden makes to the testimony of an "eye-witness" that the Nez Perce delegates to St. Louis in 1831-32 had flat heads (Chittenden 1902: 2.889) appears to be unfounded since Haines clarifies that the "eye-witness" William Walker arrived in St. Louis late in 1832, after the delegates had left the city (Haines 1937: 78). Further, Catlin did not paint them with flat heads. Even among the Salish-speaking Flatheads who did flatten their heads, the practice may have been discontinued early, as noted by Parker (1838: 80) in 1835:

> "I was disappointed to see nothing peculiar in the Flathead Indians to give them their name."

Flathead as an areal term inclusive of the Nez Perces is mentioned by Lewis and Clark. After noting that all nations west of the Rockies practiced flattening of heads Lewis remarks:

> "... it is from this peculiar form of the head that the nations east of Rocky mountains, call all the nations on this side, except the Aliohtans or Snake Indians, by the generic name of Flatheads." (Thwaites 1904-5: 4.184)

Reproduced with permission of the copyright owner. Further reproduction prohibited without permission.

Further evidence of this use may be found in Catlin's following statement:

> "The Nez Percés who inhabit the upper waters and mountainous parts of the Columbia, are a part of this tribe [Flatheads] ..." (Catlin 1841: 2.108)

and in the following phrasing in a burial certificate of a 1831 Nez Perce delegate to St. Louis:

> "... Je sousigné ai inhumé dans le Cemetière de Cette Paroisse le corps de Keepellelé ou Pipe Bard du Nez Percé dela tribu de Chopoweck Nation appelé Tête Plates ..." (Chittenden and Richardson 1905: 22, note 3)

The territory occupied by the Nez Perce, according to Spinden (1908a: 172), extended from the Bitterroot mountains on the east to the Blue mountains on the west, between latitude 45° and 47°. Thus, while mostly in Idaho, they occupied a considerable area in Oregon and Washington. The adjacent tribes were Northern Sahaptin to the west, Flatheads to the north and east, and the northern Uto-Aztecans to the south, in increasing order of enmity. The military alliance between Nez Perce and Salish against the common enemy, horse-thieves who were after the famed breed of Appaloosa, resulted in an amicable symbiosis of the two tribes. Structural

Reproduced with permission of the copyright owner. Further reproduction prohibited without permission.

borrowing from the Salish, in consequence, appears probable.

Driver and Massey (1957: 167) state that "every anthropologist agrees that man's biological evolution took place in the Old World." But we are yet to learn of the relations of the Old World languages to the present American Indian languages, the dates of their intercontinental migrations, or their subsequent development in the New World.

The evidence for human habitation in nearby areas include the Five Mile Rapids in Oregon where continuous human occupation of a site from about 11,000 years ago up to the 1820's was established (Cressman 1960: 66; 1962: 2), the Indian Well site dating from 7500 to 8500 years ago (Butler 1959: 13) on the Washington side across the Columbia from the Dalles, the Lind Coulee site of some 8700 years ago (Daugherty 1956: 256), and the Ash Cave site of about 7940 years ago in the Columbia Basin (Butler 1962: 71). The famed Fort Rock Cave sandals have a radiocarbon date of 9053 $\pm$ 350 (Libby 1955: 119). Within the present Nez Perce territory, the Weis Rockshelter site indicates continuous human habitation from 7340 $\pm$ 140 years

Reproduced with permission of the copyright owner. Further reproduction prohibited without permission.

ago (Butler 1962: 28) to about 1400 A.D. (Ibid. 29) with indications of volcanic ash deposits identified as eruptions of Mt. Mazama (Ibid. 25f.), which are dated as having occurred around 6453 years ago (Libby 1955: 118f.). The Weis Rockshelter is located in /nipéhe/ or Rocky Canyon near Cottonwood, Idaho.

Cressman notes that the time of the impact of the first Shoshonean speaking peoples who filtered into the intermontane region may be the end of the Altithermal, that is 4000 to 4500 years ago (Cressman 1960: 69), and that the date of Salish settlement in the Tillamook area may be 2000 years ago (Ibid. 71). In reference to the pre-Shoshonean linguistic groups, Cressman notes that "Sapir's Penutian stock was apparently that of the old Great Basin population" (Ibid. 74).

Butler recognized an early culture characterized by leaf-shaped projectile points found not only in the Northwest but also in Mexico, Venezuela, Peru, and Chile. He called it the Old Cordilleran Culture (Butler 1961). At Weis Rockshelter, Butler considers the Craig Mountain phase of 5500 B.C. to 1490 B.C. (Butler 1962: 54) to be the regional expression of this culture (Ibid. 56). At The Dalles and in the

Reproduced with permission of the copyright owner. Further reproduction prohibited without permission.

Columbia Basin the culture was coterminous with the anathermal period, but in the Camas Prairie region, in the Puget Lowland and in northeastern California it persisted until a later date (Ibid. 56). Swanson refers to the correspondence between the Old Cordilleran Culture and Penutian (1962: 157).

A different linguistic identification of this culture has been suggested by Daugherty, who after revising the Old Cordilleran Culture to "Northwest Cordilleran Area tradition," notes that "the remarkable correspindence, both temporally and spatially, between the concept of Northwest Cordilleran Area tradition and the apparent distribution of early Salishan languages, suggest a relationship" (1962: 149).

Both Cressman and Swanson agree that Penutian preceded Shoshonean.

Still another view is expressed by W. W. Taylor, who in reference to the Macro-Penutian classification suggested by Whorf (1935: 608) notes that "if the concept of Macro-Penutian is valid, the split between Penutian and Utaztecan was thus probably in the neighborhood of 10,000 years ago and somewhere in the mountainous region north of the Great Basin" (Taylor 1961: 75). He

Reproduced with permission of the copyright owner. Further reproduction prohibited without permission.

adds that "in fact, the Macro-Penutian speakers, as they moved southward along the western flanks of the Northern Rockies, may have been split by running into the block of Hokaltecans already occupying the desert habitat of the northern Basin." It is to be noted that Taylor's quotation begins with an "if." In Taylor's statement, the suggested sequence is first Hokaltecan, then the Macro-Penutian, which later split into Penutian and Uto-Aztecan.

With our present knowledge it is premature to establish any linguistic chronology subsequent to the earliest evidence of human habitation in the area, especially in view of the possibility that neither the equation of archaeological cultures with linguistic groups, nor that of transitions in cultures with migrations is necessarily warranted. One simple possibility is that the ancestors of the Nez Perces may have occupied their present habitat for several millenia, and that the people who occupied the Weis Rockshelter for the first time some 7340 years ago may have spoken a language ancestral to Nez Perce.

Reproduced with permission of the copyright owner. Further reproduction prohibited without permission.

Nez Perce, along with Northern Sahaptin, is a member of the Sahaptian family of languages. Sapir proposed that Sahaptin, Waiilatpuan, and Lutuami are members of a larger group, Plateau Penutian, which in turn is a member of a still larger group, Penutian (Sapir 1929). Sahaptian and Lutuami are probably related (Aoki 1963b), but beyond this there is no published demonstration of Plateau Penutian as a genetic group. Besides Sapir, exploratory attempts toward the placement of Sahaptian in a larger group include Swadesh (1954, 1956), and Hymes (1957, 1964). California Penutian, proposed by Dixon and Kroeber (1919) and demonstrated as related by Pitkin and Shipley (1958), and Sahaptian, together with Klamath, probably belong to the same genetic group.

Spinden in 1908 listed some forty divisions or bands within the Nez Perce tribe (Spinden 1908a: 174f.). That they are geographical or micropolitical units and not necessarily linguistic subdivisions is suggested by their names which are mostly derivatives of place names, e.g., /lamtá·ma/ 'Whitebird band on Salmon River' is composed of /lamáta/ 'Whitebird (place name)' and /ma/ 'from,' 'people from.'

Reproduced with permission of the copyright owner. Further reproduction prohibited without permission.

Almost a century after the tribal relocation into reservations, the historical dialect situation is not clear. According to the informants, all of whom live in the middle and south fork regions of the Clearwater River (Mr. and Mrs. Wheeler in Stites, Mrs. Wilson in Kamiah, Mr. Arthur in East Kamiah, and Mrs. Moody in Kooskia), there is a separate dialect, which may be termed the Lower Nez Perce dialect. The dialect treated in this study, the Upper Nez Perce dialect, and the Lower dialect are mutually intelligible. This division may have some historical relevance since a similar division of the tribe was mentioned by Captain Bonneville in the early 1830's.

The scanty information may be summarized as follows:

Upper	Lower	
petkúhtu?	petk^{w}éhtu?	'we will be shooting'
tukéytet	tuk^{w}éytet	'hunting'
pí·tamyalon	pí·tamyanon	'chicken hawk'
célmen	cénmen	'Chinese'
mé·ywi	mé·ymi	'morning'
so·yá·po·m	so·yá·po·nim	'of the white'
maná	manáma	'how'
sepú·msise	sepí·wemsise	'I am leading'
pe?énpe?yse	pe?énpe?nse	'he takes somebody else's'
konwacá·n	konwacá·t	'for that reason'

Reproduced with permission of the copyright owner. Further reproduction prohibited without permission.

The lower dialect seems to have at least one additional phoneme /k^w/, which marks it as the more conservative dialect of the two, according to the tentative inventory of phonemes in Proto-Sahaptian (Aoki 1962: 173). The two sets with /l/ in the Upper dialect and /n/ in the Lower may or may not be significant since n-1 consonant symbolism (300) exists in both dialects. The set with /y/ in the Upper dialect and /n/ in the Lower in allomorphs of {e·y} (benefactive suffix) may involve an incorrect identification by informants. A. B. Smith, in reference to his linguistic observations at Kamiah in 1839-41, notes that kiansha means 'go for another,' and hahnansha means 'see another's wife, children etc.' (Drury 1958: 105). In the dialect of this study Smith's forms would be /kiyé·yse/ and /hexné·yse/. Smith's teacher of Nez Perce was Chief Lawyer (Ibid. 107), whose old home was in the Upper Nez Perce area of Kamiah.

It is possible that there was an extensive vocabulary limited to myths. According to Mrs. Elizabeth Wilson there are at least the following sets, one for common use and the other limited to myths.

Reproduced with permission of the copyright owner. Further reproduction prohibited without permission.

common	myth	
ʔiceyé·ye	nisé·ʔweynu·	coyote
wé·x̣pus	nenínme	rattlesnake
wé·ptes	tipiyeléxne	eagle
hímiˑn	teqelixniké·t	wolf
yá·ʔyax	wiskeʔyné·t	goose
titó·qan	netí·telwit	human beings
hí·semtuks (luminary)	wiyetené·t	sun

The words used only by older people include /nícu/ 'younger kinsman,' /no·ciwá·tx̣/ 'we alone.' The former is without a one-word equivalent in common usage; the newer and more common form for the latter is /nonciwá·tx̣/. /kí·ʔmolikam/ 'mountains' is used only in connection with the guardian spirit quest. The common word for mountain is /mé·x̣sem/.

Certain phonetic modifications produce various subsystems of the Nez Perce language as spoken by different animals in myths.[3] Phinney notes

> "Fox speaks with utmost clarity and directness. Bear slurs consonants into i. Skunk nasalizes in a high pitched voices and changes x̣ to x and k, s to ts, a to a̱." (Phinney 1934: ix)

[3] A similar phenomenon is noted in Nootka (Sapir 1915).

Reproduced with permission of the copyright owner. Further reproduction prohibited without permission.

No corresponding information was available except for the change of n to l and s to š in Coyote's speech, e.g., /nisé·ʔweynu·/ 'coyote (in common speech)' and [lišé·ʔweylu·] 'coyote (in Coyote's speech).'

My principal informants were Mr. and Mrs. Harry Wheeler (1960-61), and Mrs. Elizabeth P. Wilson (1961-62). Other informants were Mr. David Arthur, Mr. John Mofatt, and Mrs. Lottie Moody.

Reproduced with permission of the copyright owner. Further reproduction prohibited without permission.

BIBLIOGRAPHY

The published sources on the Nez Perce Indians may be divided into scholarly and popular works. For the former this bibliography is (hopefully) exhaustive with respect to those dealing with the language. A selection of other sources are cited, including those referred to in the introduction.

Linguistic publications include two primers by Spalding (1839, 1840), a grammatical sketch by Hale (1846) based on A. B. Smith's field work, another grammatical sketch by Ainslie (1876a), a grammar and an English-Nez Perce dictionary by "a missionary of the Society of Jesus in the Rocky Mountains,"[1] a collection of texts by Phinney (1934), and a study of verb affixes by Velten (1943). There are at least three translations of various sections of the Bible: Spalding (1845), Ainslie (1876b, 1876d) and Cataldo (1914).

In manuscript are a grammar by A. B. Smith (ca. 1841), grammatical notes and an English-Nez Perce dictionary by Sue L. McBeth (ca. 1873-93), and three dictionaries; one presumably by Morvillo (ca. 1890), another by

[1]Schoenberg identifies Anthony Morvillo as the author (Schoenberg 1957: 66).

Reproduced with permission of the copyright owner. Further reproduction prohibited without permission.

William Wheeler (ca. 1900), and a third by Corbett Lawyer (1955-61). Also in manuscript are texts, grammatical notes, and a lexical file by Morris Swadesh (ca. 1930),[2] and grammatical and lexical notes by Phinney (ca. 1930).

One of the most extensive collections of Nez Perce traditions is Phinney's texts (1934). Collections in English include works by Spinden (Boas 1907, Spinden 1908b, 1917). Studies in the content and style of the Nez Perce oral literature include Skeels (1954a, 1954b, Ms) and Clark. Ethnographical studies exclusively concerned with Nez Perce are represented by Spinden's article (1908a) based on his field work, and Coale's restatement (1956) of various nineteenth-century accounts including that of Lewis and Clark. An excellent history of the Nez Perces is by Haines (1955).

Further bibliographical information is found in the following:

Beal 1963, pp. 343-357

Brosnan 1932, pp. 331-334

Drury 1936, pp. 429-431

Drury 1949, pp. 192-193

Drury 1958, pp. 367-368

Fee 1936, pp. 313-318

Haines 1939, pp. 343-349

---

[2]Even though these are catalogued as "Cayuse" the language studied is a dialect of Nez Perce.

Reproduced with permission of the copyright owner. Further reproduction prohibited without permission.

Haines 1955, pp. 311-318

Haines Ms, pp. 372-380

Howard and McGrath 1941, pp. 349-357

McWhorter 1940, pp. 313-315

McWhorter 1952, pp. 627-632

Patton Ms, pp. 131-141

Spinden 1908a, pp. 272-274

White 1950, pp. 257-294.

The bibiography is as follows:

Ainslie, George

1876a. Notes on the Grammar of the Nez Percés Language. Bulletin of the United States Geological and Geographical Survey of the Territories, vol. 2, pp. 271-277.

1876b. Johnnim taaiskt. Gospel According to John, Translated into the Nez Percés Language. Philadelphia.

1876c. Catechism for Young Children, Translated into the Nez Perce Language. Philadelphia.

1876d. First Epistle General of John, Translated into the Nez Perce Language. Philadelphia.

Reproduced with permission of the copyright owner. Further reproduction prohibited without permission.

Alvord, Benjamin

1855-60. Concerning the Manners and Customs, the Superstitions, etc. of the Indians of Oregon. In Information Respecting the History, Condition, and Prospect of the Indian Tribes of the United States, ed. Henry Rowe Schoolcraft, vol. 5, pp. 651-657.

Aoki, Haruo

1962. Nez Perce and Northern Sahaptin: A Binary Comparison. International Journal of American Linguistics, vol. 28, pp. 172-182.

1963a. Reduplications in Nez Perce. International Journal of American Linguistics, vol. 29, pp. 42-44.

1963b. On Sahaptian-Klamath Linguistic Affiliations. International Journal of American Linguistics, vol. 29, pp. 107-112.

Bailey, Robert G.

1935-47. River of No Return, a Century of Central Idaho and Eastern Washington History and Development; Together With the Wars, Customs, Myths and Legends of the Nez Perce Indians. Lewiston.

Reproduced with permission of the copyright owner. Further reproduction prohibited without permission.

Beal, Merrill D.

1963. I Will Fight No More Forever. Seattle.

Berreman, Joel Van Meter

1937. Tribal Distribution in Oregon. Memoirs of American Anthropological Association, vol. 47, pp. 1-67.

Boas, Franz

1917. Folk-Tales of Salishan and Sahaptin Tribes. Memoirs of the American Folk-Lore Society, vol. 11, pp. 180-201.

Brady, Cyrus Townsend

1907. Northwestern Fights and Fighters. New York. vol. 5, pp. 1-226.

Brosnan, Cornelius James

1932. Jason Lee, Prophet of the New Oregon. New York.

Ms. Jason Lee: A Missionary's Part in the Founding of the Commonwealth of Oregon. Ph.D. dissertation, University of California, Berkeley, 1929.

Burns, Robert Ignatius

1951. The Jesuits, the Northern Indians, and the Nez Perce War of 1877. Pacific Northwest Quarterly, vol. 42, pp. 40-76.

Reproduced with permission of the copyright owner. Further reproduction prohibited without permission.

Butler, B. Robert

1959. Lower Columbia Valley Archaeology: A Survey and Appraisal of Some Major Archaeological Resources. Tebiwa, vol. 2, pp. 6-24.

1961. The Old Cordilleran Culture in the Pacific Northwest. Occasional Papers of the Idaho State College Museum, no. 5.

1962. Contributions to the Prehistory of the Columbia Plateau. Occasional Papers of the Idaho State Museum, no. 9.

Butterfield, G.

1942. Romantic Historical Tale of the Nez Perces. Oregon Historical Quarterly, vol.43, pp. 150-157.

Cataldo, Joseph Mary

[1891] Preces et Catechismus Doctrinae Christianae Lingna [sic] Numipa [sic]. Desmet.

1914. Jesus Christ-nim kinne vetas-pa kut ka-kala time-nin i-ues pilep-eza-pa taz-pa tamtai-pa numipu-timt-ki. Portland.

Catlin, George

1841. Letters and Notes on the Manners, Customs, and Condition of North American Indians. 2 vols. London.

Chalmers, Harvey II

1962. The Last Stand of the Nez Perce: Destruction of a People. New York.

Reproduced with permission of the copyright owner. Further reproduction prohibited without permission.

Chittenden, Hiram Martin

1902. The American Fur Trade in the Far West. New York.

Chittenden, Hiram Martin and Alfred Talbot Richardson, eds.

1905. Life, Letters and Travels of Father Pierre-Jean De Smet, S. J., 1801-1873. New York.

Clark, Ella E.

1951. The Pleiades: Indian and Greek Versions. Research Studies of the State College of Washington, vol. 19, pp. 203-204.

1952. Some Nez Perce Traditions Told by Chief Armstrong. Oregon Historical Quarterly, vol. 53, pp. 181-191.

1953a. Indian Legends of the Pacific Northwest. Berkeley.

1953b. Watkuese and Lewis and Clark. Western Folklore, vol. 12, pp. 175-178.

Clark, J. S.

1945. The Nez Percés in Exile. Pacific Northwest Quarterly, vol. 36, pp. 213-232.

Coale, G. L.

1956. Ethnohistorical Sources for the Nez Percé Indians. Ethnohistory, vol. 3, pp. 246-255, 346-360.

Reproduced with permission of the copyright owner. Further reproduction prohibited without permission.

1958. Notes on the Guardian Spirit Concept Among the Nez Perce. Internationales Archiv für Ethnographie, vol. 48, pp. 135-148.

Coues, Elliott, ed.

1897. New Light on the Early History of the Greater Northwest. New York.

Cox, Ross

1831. Adventures on the Columbia River, Including the Narrative of a Residence of Six Years on the Western Side of the Rocky Mountains Among Various Indian Tribes Hitherto Unknown, Together with a Journey Across the American Continent. London.

Cressman, Luther S.

1960. Cultural Sequences at the Dalles, Oregon. Transactions of the American Philosophical Society, vol. 50, part 10.

1962. The Sandal and the Cave, the Indians of Oregon. Portland.

Culin, Stewart

1907. Games of the North American Indians. Twenty-Fourth Annual Report, Bureau of American Ethnology. pp. 304f., 493, 632.

Reproduced with permission of the copyright owner. Further reproduction prohibited without permission.

Curtis, Edward S.

1911. The North American Indian. Norwood. vol. 8, pp. 3-76, 183-185, 191-195.

Daugherty, Richard D.

1956. Archaeology of the Lind Coulee Site, Washington. Proceedings of the American Philosophical Society, vol. 100, pp. 223-278.

1962. The Intermontane Western Tradition. American Antiquity, vol. 28, pp. 144-150.

Daugherty, Richard D. and E. A. Dammel

1952. Preliminary Excavations of a Burial Site on the Snake River. Research Studies of the State College of Washington, vol. 20, pp. 122-134.

Dixon, R. B. and A. L. Kroeber

1919. Linguistic Families of California. University of California Publications in American Archaeology and Ethnology, vol. 16, pp. 47-118.

Dodge, Richard Irving

1883. Our Wild Indians. Hartford. pp. 66, 344.

Donaldson, Thomas Corwin

1941. Idaho of Yesterday. Caldwell. pp. 276-335.

Douglas, David

1914. Journal Kept by David Douglas during His Travels in North America, 1823-1827. London

Driver, Harold E. and William C. Massey

1957. Comparative Studies of North American Indians. Transactions of the American Philosophical Society, vol. 47, part 2, pp. 165-456.

Reproduced with permission of the copyright owner. Further reproduction prohibited without permission.

Drury, Clifford Merrill

1936. Henry Harmon Spalding. Caldwell.

1958. The Diaries and Letters of Henry H. Spalding and Asa Bowen Smith Relating to the Nez Perce Mission 1838-1842. Glendale.

1960. I, The Lawyer, Head Chief of the Nez Perce. The Westerners, vol. 7, no. 1, [no pagination].

Dunn, John

1845. The Oregon Territory and the British North American Fur Trade, With an Account of the Habits and Customs of the Principal Native Tribes of the Northern Continent. Philadelphia.

Eells, Myron

1882. History of Indian Missions on the Pacific Coast, Oregon, Washington, and Idaho. New York.

Farrand, L.

1921. Notes on the Nez Perce Indians. American Anthropologist, n.s. vol. 23, pp. 244-246.

Fee, Chester Anders

1936. Chief Joseph: the Biography of a Great Indian. New York.

Foreman, G.

1946. The Last Trek of the Indians. Chicago.

Reproduced with permission of the copyright owner. Further reproduction prohibited without permission.

Gass, Patrick

1807. Journal of the Voyages and Travels of a Corps of Discovery Under the Command of Captain Lewis and Captain Clark of the Army of the United States, From the Mouth of the River Missouri Through the Interior Parts of North America to the Pacific Ocean. Pittsburgh.

Gatschet, Albert Samuel

1879. Adjectives of Color in Indian Languages. American Naturalist, vol. 13, pp. 475-485.

Gray, William Henry

1870. A History of Oregon, 1792-1849, Drawn from Personal Observation and Authentic Information. Portland.

Grinnell, George Bird

1901. Punishment of the Stingy. New York. pp. 159-164.

Gunther, Erna

1950. The Westward Movement of Some Plains Traits. American Anthropologist, vol. 52, pp. 174-180.

Hale, Horatio E.

1846. Ethnography and Philology. In United States Exploring Expedition During the Years 1838-1842 Under the Command of Charles Wilkes, vol. 6, pp. 542-561.

Reproduced with permission of the copyright owner. Further reproduction prohibited without permission.

Haines, Francis D.

1937. The Nez Percé Delegation to St. Louis in 1831. Pacific Historical Review, vol. 6, pp. 71-78.

1939. Red Eagles of the Northwest. Portland.

1954. Chief Joseph and the Nez Perce Warriors. Pacific Northwest Quarterly, vol. 45, pp. 1-7.

1955. The Nez Percés. Norman.

Ms. Nez Perce Indians in Northwest History, 1805-1895. Ph.D. dissertation, University of California, Berkeley, 1938.

Henshaw, H. W. and L. Farrand

1910. Nez Percés. Bulletin 30, Bureau of American Ethnology, vol. 2, pp. 65-8.

Hines, Gustavas

1851. Oregon: Its History, Condition, Prospect. Buffalo.

Howard, Helen Addison and Dan L. McGrath

1941. War Chief Joseph. Caldwell.

Howard, Oliver Otis

1881. Nez Percé Joseph: An Account of His Ancestors, His Lands, His Confederates, His Enemies, His Murders, His War, His Pursuit and Capture. Boston.

1907. My Life and Experience among Our Hostile Indians. Hartford.

Reproduced with permission of the copyright owner. Further reproduction prohibited without permission.

Huntington, J. V. ed.

1854. Franchère's Narrative of a Voyage to the Northwest Coast of America in the Years 1811, 1812, 1813 and 1814. New York.

Hymes, Dell Hathaway

1957. Some Penutian Elements and the Penutian Hypothesis. Southwestern Journal of Anthropology, vol. 13, pp. 69-87.

1964. Evidence for Penutian in Lexical Sets with Initial *C- and *S-. International Journal of American Linguistics, vol. 30, pp. 213-242.

Irving, Washington

1836. Astoria, or Anecdotes of an Enterprise beyond the Rocky Mountains. London.

1837. The Adventures of Captain Bonneville, U.S.A., in the Rocky Mountains and the Far West Digested from His Journal and Illustrated from Various Other Sources. London.

Jacobs, Melville

1937. Historic Perspective in Indian Languages of Oregon and Washington. Pacific Northwest Quarterly, vol. 28, pp. 55-75.

Johansen, Dorothy O. and Charles M. Gates

1957. Empire of the Columbia: A History of the Pacific Northwest. New York.

Reproduced with permission of the copyright owner. Further reproduction prohibited without permission.

Joseph, Chief

1879. An Indian's View of Indian Affairs. North American Review, vol. 128, pp. 412-433.

Josephy, Alvin M. Jr.

1955. The Naming of the Nez Perces. Montana, vol. 5, no. 4, pp. 1-18.

1962. Origins of the Nez Perce People. Idaho Yesterdays, vol. 6, no. 1, pp. 2-13.

Judson, Katherine Berry

1910. Myths and Legends of the Pacific Northwest. Chicago. pp. 42-43, 81-84, 86, 112-114.

Kane, Paul

1859. Wanderings of an Artist among the Indians of North America from Canada to Vancouver's Island and Oregon through the Hudson's Bay Co.'s Territory and Back Again. London.

Kip, Lawrence

1855. The Indian Council in the Valley of the Walla-Walla, May and June 1855. San Francisco. Printed not published.

1859. Army Life on the Pacific: A Journal of the Expedition against the Northern Indians, the Tribes of the Coeur d'Alênes, Spokanes, and Pelouzes in the Summer of 1858. New York.

Lawyer, Corbett

Ms. An English-Nez Perce Dictionary. 1955-61. In possession of the author, Lapwai, Idaho.

Reproduced with permission of the copyright owner. Further reproduction prohibited without permission.

Leepar, R. D. and T. Beall

n.d. Legends of the Nez Perces.

Lewis, Albert Buell

1906. Tribes of the Columbia Valley and the Coast of Washington and Oregon. Memoirs of American Anthropological Association, vol. 1, part 2.

Lewis, Meriwether

1814. History of the Expedition under the Command of Captains Lewis and Clark to the Sources of Missouri, Thence across the Rocky Mountains and down the River Columbia to the Pacific Ocean. Performed during the Years 1804-5-6. By Order of the Government of the United States. Philadelphia.

Lewis, William S. and Paul C. Phillips, eds.

1923. The Journal of John Work. Cleveland.

Libby, Willard F.

1955. Radiocarbon Dating. 2nd edition. Chicago.

Liljeblad, Sven

1957. Indian Peoples of Idaho. [mimeographed volume for studies only] Idaho State College, Pocatello.

1960. The Indians of Idaho. Idaho Historical Series, no. 3.

Reproduced with permission of the copyright owner. Further reproduction prohibited without permission.

MacLean, John

1896. Canadian Savage Folk. Toronto. pp. 36-48.

Martin, Frances Gardiner

1950. Nine Tales of Coyote. New York.

McBeth, Kate C.

1908. The Nez Percés Since Lewis and Clark. New York.

McBeth, Sue L.

Ms. Dictionary and Grammar of the Nez Perce Language. ca. 1873-93. Library of the Bureau of American Ethnology, MS no. 2487.

MuMurray, J. W.

1887. The "Dreamers" of the Columbia River Valley in Washington Territory. Transactions of the Albany Institute, vol. 11, pp. 241-248.

McWhorter, Lucullus Virgil

1940. Yellow Wolf: His Own Story. Caldwell.

1952. Hear Me, My Chiefs! Caldwell.

Merk, Frederick, ed.

1931. Fur Trade and Empire. [George Simpson's Journal] Cambridge, Mass.

[Morvillo, Anthony]

1888. Paradigma Verbi Activi Lingua Numipu, Vulgo Nez Perce. Desmet.

Reproduced with permission of the copyright owner. Further reproduction prohibited without permission.

1891. Grammatica Linguae Numipu. Desmet.

[1891] A Catechism of Christian Doctrine in the Nez Perce Language. Desmet.

1895. A Dictionary of the Numipu or Nez Perce Language. Part 1, English-Nez Perce. St. Ignatius Mission, Montana.

Ms. A Dictionary of the Nez Perce Language. Part 2, Nez Perce-English. Gonzaga University Archives.

Osborne, D.

1955. Nez Perce Horse Castration. Davidson Journal of Anthropology, vol. 1, pp. 113-122.

Packard, R. L.

1891. Notes on the Mythology and Religion of the Nez Percé. Journal of American Folk-Lore, vol. 4, pp. 327-330.

Palmer, Joel

1847. Journals of Travels over the Rocky Mountains to the Mouth of the Columbia River, Made during the Years 1845 and 1846. In Early Western Travels, vol. 30 (ed. by Reuben Gold Thwaites). [Nez Perce vocabulary, pp. 271-276]

Parker, Samuel

1838. Journal of an Exploring Tour beyond the Rocky Mountains under the Direction of A.B.C.F.M. in the Years 1835, '36, and '37. Ithaca.

Reproduced with permission of the copyright owner. Further reproduction prohibited without permission.

Patton, Bessie Jane

Ms. The Nez Percés Indians in the Northwest Territory. M. A. thesis. University of California, Berkeley, 1942.

Phillips, Paul C., ed.

1925. Forty Years on the Frontier as Seen in the Journals and Reminiscences of Granville Suart. Cleveland..

1940. Life in the Rocky Mountains, 1830-35. Denver.

Phinney, Archie

1934. Nez Percé Texts. Columbia University Contributions to Anthropology, vol. 25. New York.

Ms. Nez Perce Notes. American Philosophical Society Library. MS no. 497.3 B63c Ps 1a 4.

Ms. Sahaptin Lexicon. American Philosophical Society Library. MS no. 497.3 B63c Ps 1a 6.

Pitkin, Harvey and William F. Shipley

1958. A Comparative Survey of California Penutian. International Journal of American Linguistics, vol. 24, 174-188.

Powell, J. W.

1891. Indian Linguistic Families of America North of Mexico. Seventh Annual Report, Bureau of American Ethnology, pp. 1-142.

Reproduced with permission of the copyright owner. Further reproduction prohibited without permission.

Quaife, Milo M., ed.

1916. The Journals of Captain Meriwether Lewis and Sergeant John Ordway, Kept on the Expedition of Western Exploration, 1803-1806. Madison.

Radin, Paul

1919. The Genetic Relationship of the North American Indian Languages. University of California Publications in American Archaeology and Ethnology, vol. 14, pp. 489-502.

Rafinesque, Constantine Samuel

1832. Languages of Oregon: Chopunish and Chinuc. Atlantic Journal, vol. 1, 133-134.

Ray, Verne F.

1939. Cultural Relations in the Plateau of Northwestern America. Publications of the Frederick Webb Hodge Anniversary Publication Fund, vol. 3, Los Angeles.

Ray, Verne F. et al.

1938. Tribal Distribution in Eastern Oregon and Adjacent Regions. American Anthropologist, n.s. vol. 40, pp. 384-395.

Rich, E. E., ed.

1947. Part of Dispatch from George Simpson Esq^{r} Governor of Ruperts Land. Toronto.

Reproduced with permission of the copyright owner. Further reproduction prohibited without permission.

Ross, Alexander

1849. Adventures of the First Settlers on the Oregon or Columbia River. London.

1855. The Fur Hunters of the Far West. 2 vols., London.

Sapir, Edward

1915. Abnormal Types of Speech in Nootka. Canada Department of Mines, Geological Survey, Memoir 62, Anthropological Series, No. 5.

1929. Central and North American Languages. Encyclopaedia Britannica, 14th edition, vol. 5, pp. 138-141.

Schoenberg, Wilfred P., S. J.

1957. Jesuit Mission Presses in the Pacific Northwest. Portland.

Scouler, J.

1848. On the Indian Tribes Inhabiting the North-West Coast of America. Journal of the Ethnological Society, vol. 1, pp. 228-252.

Skeels, Dell Roy

1954a. A Classification of Humor in Nez Perce Mythology. Journal of American Folk-Lore, vol. 67, pp. 57-64.

1954b. The Function of Humor in Three Nez Perce Indian Myths. American Imago, vol. 11, pp. 248-261.

Reproduced with permission of the copyright owner. Further reproduction prohibited without permission.

Ms. Style in the Unwritten Literature of the Nez Perce Indians. Ph. D. dissertation. University of Washington, Seattle, 1949.

Smith, Asa Bowen

Ms. Peculiarities of the Nez Percé Language. Archives of American Board. [ca. 1841]

Spalding, Henry Harmon

1839. Nez Percés First Book. Lapwai.

1840. Numipuain Shapahitamanash Timash: Primer in the Nez Percés Language. Lapwai.

1845. Matthewnim Taaiskt. Gospel of Matthew in Nez Percés Language. Clearwater.

Spinden, Herbert Joseph

1908a. The Nez Percé Indians. Memoirs of American Anthropological Association, vol. 2, pp. 165-274.

1908b. Myths of the Nez Percé Indians. Journal of American Folk-Lore, vol. 21, pp. 13-23, 149-158.

1917. Nez Percé Tales. Memoirs of American Folk-Lore Society, vol. 11, pp. 180-201.

Steward, Julian H.

1937. Linguistic Distributions and Political Groups of the Great Basin Shoshoneans. American Anthropologist, vol. 39, pp. 625-34.

Reproduced with permission of the copyright owner. Further reproduction prohibited without permission.

Sutherland, Thomas A.

1878. Howard's Campaign against the Nez Percé Indians, 1877. Portland.

Swadesh, Morris

1954. Perspective and Problems of American Comparative Linguistics. Word, vol. 10, pp. 306-332.

1956. Problems of Long-Range Comparison in Penutian. Language, vol. 32, pp. 17-41.

Ms. Cayuse Interlinear Texts. American Philosophical Society Library. MS no. 497.3 B63c Ps 1a 1 [1930].

Ms. Sahaptin-Nez Perce Grammatical Notes. American Philosophical Society Library. MS no. 497.3 B63c Ps 1a 2 [1930].

Ms. Cayuse Lexical File. American Philosophical Society Library. MS no. 497.3 B63c Ps 1a 3 [1930].

Swanson, Earl H. Jr.

1962. Early Cultures in Northwestern America. American Antiquity, vol. 28, pp. 151-158.

Sweetser, Kate Dickinson

1913. Book of Indian Braves. New York. pp. 105-128.

Taylor, Frank J., ed.

1944. Burbank among the Indians. Caldwell. pp. 175-184.

Taylor, Walter W.

1961. Archaeology and Language in Western North America. American Antiquity, vol. 27, pp. 71-81.

Reproduced with permission of the copyright owner. Further reproduction prohibited without permission.

Teit, James Alexander

1930. The Salishan Tribes of the Western Plateaus. Forty-fifth Annual Report, Bureau of American Ethnology.

Thwaites, Reuben Gold, ed.

1904-5. Original Journals of the Lewis and Clark Expedition, 1804-1806. 8 vols. New York.

Tolmie, W. F. and G. M. Dawson

1884. Comparative Vocabularies of the Indian Tribes of British Columbia.

Townsend, John Kirk

1839. Narrative of a Journey across the Rocky Mountains to the Columbia River and a Visit to the Sandwich Islands. Philadelphia.

Tyrrell, J. B. ed.

1916. David Thompson. Narrative of His Explorations in Western America 1784-1812. Toronto.

Velten, Harry de Veltheyn

1943. The Nez Perce Verb. Pacific Northwest Quarterly, vol. 34, pp. 271-292.

Ms. A Brief Comparative Analysis of Nez Percé Grammar. American Philosophical Society Library. MS no. 497.3 B63c Ps 1a 5 [ca. 1935].

Reproduced with permission of the copyright owner. Further reproduction prohibited without permission.

Victor, Frances Fuller

1870. The River of the West. Hartford.

Warren, Elizabeth Spalding

1917. Memoirs of the West: The Spaldings. Portland.

Wheeler, William

Ms. An English-Nez Perce Dictionary. ca. 1900. In possession of Mrs. Ida Wheeler, Stites, Idaho.

White, M. Catherine, ed.

1950. David Thompson's Journals Relating to Montana and Adjacent Regions 1808-1812. Missoula.

Whorf, Benjamin Lee

1935. The Comparative Linguistics of Uto-Aztecan. American Anthropologist, vol. 37, pp. 600-608.

Wyman, Ann

1935. Cornhusk Bags of the Nez Percé Indians. Southwest Museum Leaflets, no. 1, vol. 9, pp. 89-95.

Young, F. G., ed.

1899. The Correspondence and Journals of Captain Nathaniel J. Wyeth 1831-6. In Sources of the History of Oregon, vol. 7, parts 1-6. Eugene.

Reproduced with permission of the copyright owner. Further reproduction prohibited without permission.

LIST OF SYMBOLS

[ ]	Phonetic brackets (Chapter One)
[x]	"x is optional" (Chapters Two and Three)
/ /	Phonemic brackets
‖ ‖	Morphophonemic brackets
{ }	Morphemic brackets
< x >	"class of items including x"
$\underset{\sim}{f}$	"in free variation with"
~	"varies with"
:	"is represented by" (between two forms)
C	Consonant
P	Stop
V	Vowel

Special symbols for the section on kinship term stems (510.3)

(m)	a man speaking	Mo	mother, mother's
(f)	a woman speaking	O	older
Br	brother, brother's	Si	sister, sister's
Ch	child, child's	So	son, son's
Da	daughter, daughter's	Wi	wife, wife's
Fa	father, father's	Y	younger
Hu	husband, husband's		

Reproduced with permission of the copyright owner. Further reproduction prohibited without permission.

aS	adjective stem
aT	adjective theme
At	attributive
C	connective
Cc	coordinating connective
CL	clause
CLc	copulative clause
CLd	dependent clause
CLg	general clause
CLh	hortatory clause
CLi	interrogative clause
CLp	possessive clause
Cs	subordinating connective
cvS	copulative verb stem
cvT	copulative verb theme
dS	demonstrative stem
dT	demonstrative theme
esT	expanded substantive theme
GPh	general phrase
gvS	general verb stem
gvT	general verb theme
H	hortatory particle
HW	hortatory word
I	interjection
IPh	interjectory phrase
kS	kinship stem
kT	kinship theme
L	locative
nS	general noun stem
nT	general noun theme
nuS	numeral stem
nuT	numeral theme
O	object
Ph	phrase
ppS	personal pronoun stem
ppT	personal pronoun theme
pS	pronominal suffix
Q	question particle
QW	question word
S	subject
SEN	sentence
sT	substantive theme
Vc	copula
Vf	finite verb
Vg	general verb
Vp	possessive verb

Reproduced with permission of the copyright owner. Further reproduction prohibited without permission.

CHAPTER ONE

PHONOLOGY

100. PHONEMICS

Nez Perce has 36 phonemes as follows:

Segmentals

Consonants	Labial	Dental	Alveolar	Velar	Post-Velar	Glottal
Plain:						
Stops	p	t	c	k	q	ʔ
Spirants		ɬ	s	x	x̣	h
Nasals	m	n				
Semivowels	w		y			
Lateral		l				
Glottalized:						
Stops	p̓	t̓	c̓	k̓	q̓	
Nasals	m̓	n̓				
Semivowels	w̓		y̓			
Lateral		l̓				

Vowels	Front	Central	Back
High	i		u
Mid			o
Low	e	a	

Suprasegmentals

Length: ·

Stress: ˊ

Reproduced with permission of the copyright owner. Further reproduction prohibited without permission.

Junctures

Phonological word juncture	+
Pause form	,
Terminal contour	.

110. Consonants.[1] There are at least two directions in which general allophonic statements for consonants may be made: (1) according to the manner of articulation, and (2) according to the point of articulation.

(1) The voiceless plain stops /p/, /t/ and /c/ are unaspirated before a vowel, moderately aspirated before another consonant, and strongly aspirated before a juncture.

The voiceless plain stops /p/, /t/, /c/ and /q/ occur in close transition when geminated. /k/ and /ʔ/ do not geminate.

The voiced continuants /m/, /n/, /w/, /y/ and /l/ are frequently voiceless before a terminal contour.

(2) The dental consonants /t/, /ṯ/, /n/ and /l/ are palatalized before /u/.

The lamino-alveolar consonants /s/ and /c/ are palatalized before /i/.[2]

---

[1]The allophony describes Mrs. HW's ideolect.

[2]In the ideolect of HW, /s/ and /c/ are palatalized everywhere, apparently as in the dialects studied by Smith, Spalding, and Ainslie.

Reproduced with permission of the copyright owner. Further reproduction prohibited without permission.

/p/ (bilabial) is: unaspirated and without initial closure (since the preceding segment is unreleased) after /p/ and before a vowel, e.g.,

mí̓ippe 'at a place where elderberries are'

unaspirated with initial closure elsewhere before a vowel,

páyn 'to arrive'

ʔápa 'brick of ground camas'

weyí·letpu· 'Cayuse'

cí·kspe 'at sister-in-law's' (a woman speaking)

unreleased before /p/, e.g.,

mí̓ippe 'at a place where elderberries are'

moderately aspirated before a consonant other than /p/, e.g.,

qepsíʔs 'evil'

múʔpc 'one-year old fawn'

walápsksa 'I jerk it away'

and strongly aspirated elsewhere, e.g.,

ʔásqap 'younger brother' (a man speaking)

cé̓yne·sp (place name).

/t/ (apico-dental) is: unaspirated and palatalized before /u/,[3] e.g.,

tú·skex 'upward'

peʔtú·qes 'man-crazy'

---

[3]/t/ does not occur, probably fortuitously, after /t/ and before /u/.

Reproduced with permission of the copyright owner. Further reproduction prohibited without permission.

unaspirated, unpalatalized and without initial closure after /t/ and before vowels other than /u/, e.g.,

?ipnattiwá·tit 'monologue'

unaspirated, unpalatalized and with initial closure elsewhere before vowels other than /u/, e.g.,

téhes 'ice'

?á·tim 'arm'

?isé·ptekey 'parfleche'

ḱú·xsteyn 'to guess wrong'

?e?npté·ce 'I go to get it'

unreleased before /t/, e.g.,

weqíttise 'I loudly speak'

moderately aspirated before consonants other than /t/, e.g.,

petkúhtu? 'we will be shooting'

wasátqsa 'I whip'

weqíwtkse 'I am cutting grass'

and strongly aspirated elsewhere, e.g.,

lepít 'two'

?elwéht 'spring (season)'

wehéyqt 'necklace'

ké?npt 'to bite.'

/c/ (apico-alveolar) is: unaspirated, palatalized and without closure after /c/ and before /i/, e.g.,

Reproduced with permission of the copyright owner. Further reproduction prohibited without permission.

picpíccim 'only red fir trees'

unaspirated, palatalized with initial closure elsewhere before /i/, e.g.,

cílmi 'squirrel'

hiwehcí·x 'they are barking'

unaspirated, unpalatalized without initial closure after /c/ and before vowels other than /i/, e.g.,

ḱaccaynó·mya?c 'coyote'

unaspirated, unpalatalized with initial closure elsewhere before vowels other than /i/, e.g.,

cawí·tx 'wild carrot'

piḱé·xsce 'I am unlucky'

unreleased before /c/, e.g.,

picpíccim 'only red fir trees'

moderately aspirated before consonants other than /c/, e.g.,

lí·ckaw (place name)

léq̓excne (place name)

and strongly aspirated elsewhere, e.g.,

wálc 'knife'

pálx̣c 'rabbit'

títe?wxc 'chisel mouth.'

/k/ (dorso-velar) is: unaspirated and slightly labialized before /i/, e.g.,

Reproduced with permission of the copyright owner. Further reproduction prohibited without permission.

kimíle 'tamarak'

ḱapskísa 'I eat from the bones'

unaspirated and unpalatalized before vowels other than /i/, e.g.,

ké·tim 'spear'

lí·ckaw (place name)

and moderately aspirated before consonants, e.g.,

tewlí·kt 'tree'

walápsksa 'I jerk it away.'

/k/ does not occur before /k/ or a juncture.

/q/ (dorso-postvelar) has a spirantal off-glide without initial closure after /q/ and before a vowel, e.g.,

hiqqé·wise 'he is drunk'

has a spirantal off-glide with initial closure elsewhere before a vowel, e.g.,

qí·wn 'old man'

hi?psqíke?ykse 'he is walking'

tewqeqé·wit 'nightmare'

is unreleased before /q/, e.g.,

hiqqé·wise 'he is drunk'

and moderately aspirated before a consonant other than /q/, e.g.,

ná·qc 'one'

wéwpe?qt 'to split'

wasátqsa 'I whip.'

Reproduced with permission of the copyright owner. Further reproduction prohibited without permission.

With one exception noted in 200., /q/ does not occur before a juncture.

/ʔ/ is glottal, e.g.,

ʔé·le ʔ 'paternal grandmother' (vocative)

ṭáʔc 'good'

múʔpc 'one-year old fawn'

ʔewx̣cʔúpeʔqe 'I broke it by sitting on it.'

The spirants are represented by the following allophones:

/ɬ/ (apico-alveolar lateral) alternates freely with a homorganic affricate between vowels, e.g.,

cú·ɬim 'bull,'

elsewhere /ɬ/ is an apico-alveolar lateral spirant, e.g.,

ɬé·pɬep 'butterfly.'

/s/ (lamino-alveolar) is palatalized before /i/, e.g.,

símux 'charcoal,'

and unpalatalized elsewhere, e.g.,

sáway 'graveyard,'

máqs 'gall.'

/x/ (dorso-velar) is backed before /q/ or /x̣/, e.g.,

ʔatwíyaxqana 'I advise him,'

te·xx̣í·c̓emkse 'I am angry because of cold,'

and is dorso-velar elsewhere, e.g.,

watí·sx 'tomorrow,' 'yesterday.'

Reproduced with permission of the copyright owner. Further reproduction prohibited without permission.

/x̣/ (dorso-postvelar) is a fortis trill between consonants, e.g.,

pitx̣pá·ma 'nephews, nieces',

and is a less fortis spirant elsewhere, e.g.,

tasx̣ 'grease.'

/h/ (faucal), after a vowel and before a consonant, is a voiceless, non-vocalic off-glide homorganic with the preceding vowel, e.g.,

ʔelwèht 'year',

and is a faucal spirant elsewhere, e.g.,

há·ma 'man, husband.'

The sonornats are represented by the following allophones:

/m/ (bilabial nasal) is frequently voiceless in final position, e.g.,

wá·ʔwam 'head of stream',

and voiced elsewhere, e.g.,

mitá·t 'three.'

/n/ (anico-dental nasal) is velarized before /k/ or /q/, e.g.,

ʔanqá·x̣alpx 'remove!',

palatalized before /u/, e.g.,

nú·snu 'nose',

frequently voiceless in final position, e.g.,

Reproduced with permission of the copyright owner. Further reproduction prohibited without permission.

wí·clamn 'lacking,'

and is an apico-dental voiced nasal elsewhere, e.g.,

ná·qc 'one.'

/w/ (bilabial semivowel) is frequently voiceless in final position, e.g.,

ní·ckaw 'basket-cap,'

and is voiced elsewhere, e.g.,

wú·yce 'I run away.'

/y/ (palatal semivowel) is frequently voiceless after a vowel and in final position, e.g.,

kúy 'go away!'

is voiced and with strong friction after /n/ and before a vowel, e.g.,

konyá 'over there,'

and is voiced without friction elsewhere, e.g.,

yá·ca? 'elder brother' (vocative).

/l/ (lamino-alveolar lateral) is palatalized and voiced before /u/, e.g.,

?ilú·t 'belly,'

voiceless in final position, e.g.,

?excí?mil 'throat,'

and is lamino-alveolar and voiced elsewhere, e.g.,

lepít 'two.'

The following examples support the phonemic analysis given above:

Reproduced with permission of the copyright owner. Further reproduction prohibited without permission.

/p/ - /t/: pé·qt 'bark (of tree)', té·qt 'woodpecker.'

/t/ - /c/: ʔá·tim 'come out!', ʔá·cim 'come in!'

/c/ - /k/: yá·caʔ 'elder brother', yá·kaʔ 'brown bear.'

/k/ - /q/: pé·kt 'woman's younger brother', pé·qt 'bark (of tree).'

/q/ - /ʔ/: qí·wn 'old man', ʔí·wn 'urination.'

/yi/ - /ʔi/: wé·yikt 'to move across', wé·ʔikt 'grease.'

/wu/ - /ʔu/: wú·yce 'I run away', ʔú·yse 'I begin.' (imperfect pair).

/t/ - /s/: hiwtelí·kse 'he spreads (something)', hiwselí·kse 'he stands.'

/c/ - /s/: hé·cu 'fire wood', hé·su 'eel.'

/q/ - /x̣/: qápqap 'cottonwood tree', x̣ápx̣ap 'skin disease.' (imperfect pair).

/k/ - /h/: kéhen 'biceps', hehen 'stem of plants.'

/ʔ/ - /h/: ʔehétewise 'I admire him', hehétewise 'he admires.'

/x/ - /x̣/: ʔawyá·xnoʔqa 'I could see it as I went', ʔaẃyá·x̣noʔqa 'I could find it.' (imperfect pair).

/m/ - /n/: ʔí·m 'you (sg.)', ʔí·n 'I.'

/n/ - /nn/: ʔimí·ne 'knee (object case)', ʔimí·nne 'gopher (object case).'

Reproduced with permission of the copyright owner. Further reproduction prohibited without permission.

The glottalized consonants are distinguished by simultaneous coarticulation of glottal closure, while ʔC and Cʔ are cases of preglottalization and postglottalization, the latter being very infrequent. In glottalized stops, after simultaneous closure at the two points, the oral closure is released slightly before the release of the glottal closure. As a result a slight pop is sometimes produced, e.g., p̓áyn 'to be drained.' In cases of preglottalized stops, three articulatory stages are observed: first glottal closure, second, simultaneous glottal release and oral closure, and finally oral release, e.g., ʔaʔpáwaca 'I am putting it.' In cases of post-glottalization, the three stages are: first, oral closure, then simultaneous oral release and glottal closure, and finally glottal release, e.g., hipʔímce 'it is growing.'

The glottalized stops occur word-initially and word-medially, while the general pattern seems to indicate that the glottalized continuants occur word-medially and finally. In general the glottalized consonants are found much less frequently than their unglottalized counterparts. That /n̓/ and /l̓/ are not found word-finally is probably fortuitous.

/p̓/ is bilabial stop, e.g.,

p̓áyn 'to be drained'

ʔilp̓ílp 'red'

Reproduced with permission of the copyright owner. Further reproduction prohibited without permission.

/t̓/ is apico-dental stop, e.g.,

t̓áwn 'to guess in stick game'

ʔí·t̓it 'end,' 'stern of canoe'

/c̓/ is apico-alveolar stop, e.g.,

c̓í·x̣lu 'mountain ground squirrel'

wé·c̓ekse 'I am jumping'

/k̓/ is dorso-velar stop, e.g.,

k̓úyc 'nine'

hi·ʔk̓íwce 'it is sunny'

/q̓/ is dorso-postvelar stop, e.g.,

q̓áxno 'prairie chicken'

yoq̓opí 'that'

/m̓/ is bilabial nasal, e.g.,

cú·ɨim̓ayn 'for the steer'

laʔám̓ 'all'

/n̓/ is apico-dental nasal, e.g.,

ʔa·kín̓ax̣ 'I would have seen him'

/w̓/ is bilabial semivowel, e.g.,

ʔew̓ní·se 'I am giving it'

k̓í·w̓ 'cut (past participle)'

/y̓/ is palatal semivowel, e.g.,

ʔé·y̓sce 'I am happy'

hipstú·y̓ 'enough'

/l̓/ is lateral, e.g.,

kiwkiwíl̓ec 'drum.'

Reproduced with permission of the copyright owner. Further reproduction prohibited without permission.

The following examples support the phonemic analysis given above:

/p/ - /p̓/: páyn 'to arrive,' p̓áyn 'to be drained'

/t/ - /t̓/: táwn 'to make stone tools,' t̓áwn 'to guess in stick game'

/c/ - /c̓/: cewcé·w 'whisper,' c̓é·wc̓ew 'ghost' (imperfect pair)

/k/ - /k̓/: tukúx 'stiff,' tuk̓úx 'straight'

/q/ - /q̓/: qócqoc 'meadowlark,' q̓ocq̓óc 'naked' (imperfect pair)

/n/ - /n̓/: tinú·n 'grass widow,' tin̓ú·n 'male mountain sheep'

/w/ - /w̓/: wá·wa 'mosquito,' wá·w̓a 'fish hook'

/ʔp/ - /p̓/ - /pʔ/: ʔaʔpáwaca 'I am putting it,' ʔap̓ap̓á·p̓ap 'lizard,' 'tadpole,' hipʔímce 'it is growing'

/ʔy/ - /y̓/ - /yʔ/: wakaykaʔyá·ʔy 'uncleaned,' hipstú·y̓ 'enough,' tíʔma·yʔ 'maiden'

Reproduced with permission of the copyright owner. Further reproduction prohibited without permission.

120. Vowels. All unstressed vowels have somewhat centralized lenis and lax allophones.

After glottalization, vowels have a pharyngealized quality, e.g.,

ćá·no 'that man',

ćélćel 'fat, awkward.'

After /h/ or /ʔ/ and before /n/, stressed vowels are frequently nasalized, e.g.,

ʔé·ni 'fool hen',

hé·neḱe 'again.'

/i/ is high, front and unrounded before /·/, e.g.,

sí·s 'broth',

has a centralized on-glide after /q/ or /x̣/, e.g.,

qí·wn 'old man',

x̣í·ćemce 'I am angry',

and is lower high, front and unrounded elsewhere, e.g.,

lepít 'two.'

/e/ is lower mid, front and unrounded after /y/, e.g.,

kiyéwkiyew 'katydids',

and higher low, and rounded elsewhere, e.g.,

ʔé·ks 'sister.'

/a/ is higher low, central and unrounded after /w/ or /m/, e.g.,

maqs 'gall',

Reproduced with permission of the copyright owner. Further reproduction prohibited without permission.

and is low central and unrounded elsewhere, e.g.,

ná·qc 'one.'

/o/ is mid, back and rounded after /w/ or /m/, e.g.,

mó·ɬa? 'maggot',

and is lower mid, back and rounded elsewhere, e.g.,

?oylá·qc 'six.'

/u/ is high and back before /·/, e.g.,

?ú·yit 'beginning',

and is lower high and back elsewhere, e.g.,

ƙúyc 'nine.'

In general, rounding is non-distinctive.

The following examples support the phonemic analysis given above:

/u/ - /e/ - /a/: súhuy 'fat', séhey 'worm', sáhay 'sore.' (imperfect pair).

/i/ - /u/: qiyé·sqiyes 'mean looking', quyé·squyes 'bluejay.' (imperfect pair).

/u/ - /o/: qulusqú·lus 'dandruff', qolosqó·los 'esophagus.' (imperfect pair).

/i/ - /e/: nikíse (place name), nekíse 'I think.'

/i/ - /a/: ?a·kcí·qa 'we saw it', ?a·kcá·qa 'I saw it.'

Reproduced with permission of the copyright owner. Further reproduction prohibited without permission.

130. Suprasegmentals

/·/ (vowel length) is characterized by relative tenseness in the syllable and a vowel length of approximately two morae, e.g.,

sí·s 'broth' (cf. sís 'navel')

mé·qe? 'snow' (cf. méqe? 'paternal uncle (vocative)')

ha·lálalcix 'they cheer' (cf. halálalcix 'we cheer').

/ˊ/ (stress) is characterized by high pitch and relative loudness in the syllable, e.g.,

mé·qe? 'snow.'

/+/ (phonological word juncture) is characterized by a mid-to-high glide on the following long stressed syllable, and by an occurrence of the dental allophone of a preceding /n/ when /k/ or /q/ follows, e.g.,

/nk/ : [ŋk] ?anká·cḱilksa 'I tear it with hand'

/n+k/ : [nk] ?í·n + kú·se 'I go.'

/,/ (pause form) is characterized by a clearly marked short silence. The following long stressed syllable starts with middle pitch.

Reproduced with permission of the copyright owner. Further reproduction prohibited without permission.

/./ (terminal contour) is characterized by a slight drop in pitch, and by voiceless allophones of the preceding m, n, w, y or l.

The following examples support the phonemic analysis given above:

/·/ - no length: sí·s 'broth,' sís 'navel'; mé·qe? 'snow,' méqe? 'paternal uncle (vocative)'; ?a·tó?sa 'I go out to see somebody else's,' ?ató?sa 'I go out to see mine'; ?ó·q̓oxc 'ankle,' ?óq̓oxc (man's name); mú· 'cow,' mú 'call.'

/ˊ/ - weak stress: wé·cese 'I am riding,' we·cé·se 'I am dancing.' (imperfect pair)

/+/ - no juncture: ?é· + wí·ce 'you are crying,' ?ewí·ce 'I am sleepy.' (imperfect pair)

Reproduced with permission of the copyright owner. Further reproduction prohibited without permission.

140. Phonotactics

141. The syllable canon is $C_1V(\cdot)(C_2)(C_3)(C_4)(C_5)$. After a phonological word juncture C_1 may be any consonant except glottalized continuants; elsewhere, C_1 may be any consonant. V may be any vowel. C_2, when followed by a juncture, may be any consonant except /k/, /q/,[4] /h/ and glottalized stops. There are no consonant clusters after a phonological word juncture.

142. Prejunctural consonants and consonant clusters.

In general, three-member and four-member prejunctural clusters contain two-member prejunctural clusters in final position. Namely, in $C_1V(\cdot)C_2C_3C_4$, C_3C_4 are permissible final position two-member clusters (with the exception of qt and qs), so are C_4C_5 in $C_1V(\cdot)C_2C_3C_4C_5$. However, in four-member clusters $C_3C_4C_5$ are permitted final three-member clusters in only three cases out of eight examples.

No gemination or glottalized consonants are found in prejunctural clusters. It may be significant that /p/ and sonorants do not occur as the final member after stops (with the exception of /ʔ/) in prejunctural clusters.

---

[4] An exception is /hoq̓hó·q̓/ 'hog,' a probable loan from English.

Reproduced with permission of the copyright owner. Further reproduction prohibited without permission.

The prejunctural consonants and consonant clusters may be summarized as follows:

C_1	V(·)	C_2	C_3	C_4	C_5
	any V	C^{-}k,q,h,ṗ			
		C^{-}ɨ,ć	C^{-}k,q,h,ć		
		C^{-}p,t,k,q,ć	p,t,c,q,x,y	t,c,s,x̣	
		p,ʔ,h,x	t,c,n,y,w,s	p,k,s	t,c,s

Examples of $C_1V(\cdot)C_2$:

p	ʔásqap	'younger brother of a male'
t	mitá·t	'three'
c	x̣áʔwic	'sharp (of points)'
ʔ	ʔé·leʔ	'paternal grandmother (vocative)'
ɨ	tá·qma·ɨ	'hat'
s	téhes	'ice'
x	símux	'charcoal'
x̣	peqíyex̣	'nephew'
m	cú·ɨim	'bull'
n	tinú·n	'grass widow'
w	sá·w	'silence'
y	weté·key	'leggings'
l	ʔex̣cíʔmil	'throat'

Reproduced with permission of the copyright owner. Further reproduction prohibited without permission.

m̓	la?ám̓	'all'
w̓	kí·w̓	'cut (past participle)'
y̓	hipstú·y̓	'enough'

Examples of $C_1V(\cdot)C_2C_3$:

The combinations found are as follows:

C_2 \ C_3	p	t	c	?	ɬ	s	x	x̣	m	n	w	y	l
p		1	2			3	4	5					
t						6	7	8					
c							9						
k		10				11							
q			12			13							
?	14	15	16			17		18	19	20	21	22	
s	23	24			25		26	27					
x		28	29			30							
x̣	31		32			33							
h̓		34											
m		35				36	37	38		39			
n								40	41				
w		42					43			44			
y			45	46			47	48		49			50
l	51	52	53	54			55	56					

1. pt ?uyné·pt 'seven'
2. pc k̓apck̓ápc 'furious'
3. ps ?ehíps 'I ate it'
4. px ?enímipx 'toward winter'
5. px̣ sipx̣sípx̣ 'dirty'
6. ts só·ts 'deep water'
7. tx ?iní·tx 'to the house'
8. tx̣ pí·tx̣ 'maternal uncle'

Reproduced with permission of the copyright owner. Further reproduction prohibited without permission.

9.	cx	ʔá·cx	'go in!'
10.	kt	tewlí·kt	'tree'
11.	ks	pewé·yiks	'we crossed over'
12.	qc	ná·qc	'one'
13.	qs	sá·slaqs	'moose'
14.	ʔp	x̣eʔpx̣éʔp	'sneaky'
15.	ʔt	kiké?t	'blood'
16.	ʔc	táʔc	'good'
17.	ʔs	sewíʔs	'mussel'
18.	ʔx̣	nacóʔx̣	'Chinook salmon'
19.	ʔm	híʔm	'mouth'
20.	ʔn	qeqé·wiʔn	'drunk'
21.	ʔw	kíʔw	'as'
22.	ʔy	wakaykaʔyá·ʔy	'uncleaned'
23.	sp	c̓éyne·sp	(place name)
24.	st	píst	'father'
25.	sɨ	másɨ	'so long,' 'that long'
26.	sx	qilá·sx	'otter'
27.	sx̣	písx̣	'tick'
28.	xt	múxtmuxt	'small sucker fish'
29.	xc	hé·ʔyuxc	'cottontail'
30.	xs	púxs	'inner skin'
31.	x̣p	pitáx̣p	'man's sister's child'
32.	x̣c	táx̣c	'definitely'
33.	x̣s	táx̣s	'willow'

Reproduced with permission of the copyright owner. Further reproduction prohibited without permission.

34.	ht	ʔelwéht	'spring (season)'
35.	mt	pú·timt	'ten'
36.	ms	tíms	'chokecherry'
37.	mx	tamántoyamx	(place name)
38.	mx̣	pí·mx̣	'paternal uncle'
39.	mn	ʔí·mn	'knee'
40.	nx̣	sapankitá·nx̣	'to plant'
41.	nm	kínm	'this' (possessive case)
42.	wt	laymíwt	'small'
43.	wx	ʔiskíwx	'cut it!'
44.	wn	qí·wn	'old man'
45.	yc	kúyc	'nine'
46.	yʔ	tiʔmá·yʔ	'maiden'
47.	yx	ʔú·tkuyx	'take it away!'
48.	yx̣	x̣ayx̣áyx̣	'white'
49.	yn	ciwáyn	'projection'
50.	yl	kiwáyl	'this long'
51.	lp	ʔilpílp	'red'
52.	lt	qúlt	'penis'
53.	lc	wálc	'knife'
54.	lʔ	ʔiskí·lʔ	'rock mouse'
55.	lx	cú·yekílx	'close it!'
56.	lx̣	ʔispá·lx̣	'sack'

Reproduced with permission of the copyright owner. Further reproduction prohibited without permission.

Examples of $C_1V(\cdot)C_2C_3C_4$:

The combinations found are as follows:

C_2	C_3	C_4			
		t	c	s	x
ʔ	p	1	2		
x					3
x̣					4
h		5			
n		6			
y				7	
l		8		9	10
m	t				11
w					12
y					13
x̣	c				14
c	k	15			
ʔ		16		17	
ɨ		18		19	
s		20			
m				21	
n		22			
w		23			
y		24		25	
l		26			
ʔ	q	27		28	
m		29			
y		30			
l	x̣		31		
ʔ	y		32	33	34

1. ʔpt ce·ptuktex̣éʔpt 'to crawl under'
2. ʔpc múʔpc 'one-year old fawn'
3. xpx wepsú·xpx 'to the right'
4. x̣px ʔeqtéx̣px 'to the side'

Reproduced with permission of the copyright owner. Further reproduction prohibited without permission.

5.	hpt	wé·plehpt	'imagination'
6.	npt	wiye?énpt	'to carry'
7.	yps	ťaypsťáyps	'tough (of wood)'
8.	lpt	temé·ci·lpt	'encampment'
9.	lps	líílps	'mushroom, sp.'
10.	lpx	?anká·x̣alpx	'open!'
11.	mtx	?ú·yitimtx	'come and start!'
12.	wtx	?á·cqawtx	'go in!'
13.	ytx	wiske?éytx	'go on a trip!'
14.	x̣cx	léq̓ex̣cx	(place name)
15.	ckt	?icapyó·ckt	'strip of tanned hide'
16.	?kt	hí·kte?kt	'to cover'
17.	?ks	tux̌cé?ks	'get stuck (in mud)'
18.	łkt	niká·q̓ołkt	'to remove'
19.	łks	tuké·pq̓ełks	'I crushed with hand'
20.	skt	sapó·ta·skt	'to blow to put out'
21.	mks	wislámks	'I moved'
22.	nkt	cepé·ketinkt	'poisoning'
23.	wkt	tax̣sáwkt	'echo'
24.	ykt	waṕáykt	'to wash'
25.	yks	waṕáyks	'I washed'
26.	lkt	taqaḱálkt	'to close door'
27.	?qt	wéwpe?qt	'to split'
28.	?qs	wé·?mupe?qs	'I broke with head'

Reproduced with permission of the copyright owner. Further reproduction prohibited without permission.

29. mqt wecímqt 'to get splinter'
30. yqt wehéyqt 'necklace'
31. lx̣c pálx̣c 'rabbit'
32. ʔyc hé·ʔyc 'loose'
33. ʔys hé·ʔys 'itch,' 'rash'
34. ʔyx wilé·keʔyx 'run!'

Examples of $C_1V(\cdot)C_2C_3C_4C_5$:

1. pckt weléykipckt 'to tie'
2. ʔtkt weʔlé·muʔtkt 'to tie hair on the forehead'
3. ʔnpt kéʔnpt 'to bite'
4. ʔykt quqúkeʔykt 'to gallop'
5. ʔwxc títeʔwxc 'chisel mouth'
6. htkt watáhtkt 'to wade out'
7. xsks t̓úxsks 'I smashed with hand'
8. xskt ʔicet̓úxskt 'to cut open'

143. The consonants and consonant clusters that occur intervocalically may be summarized as follows:

C_1	C_2	C_3	C_4
any C			
Cu,c̓,k̓,q̓,w̓	$C^{-\dot{w},\dot{y}}$		
Cu	$Cu^{-ɬ,h}$	$Cu^{-x,h,\dot{p}}$	
p,ʔ,w,l	p,t,c,s,x̣,m,n,y,l	p,c,k,q,s	t,c,k,q,ʔ,s

Cu: unglottalized consonants, Pu: unglottalized stops

Reproduced with permission of the copyright owner. Further reproduction prohibited without permission.

Examples of V(·)C_1V:

p	ʔápa	'brick of ground camas'
t	ʔá·tim	'arm'
c	ʔá·cim	'come in!'
k	hekíce	'I see'
q	ʔá·qam	'above'
ʔ	ʔá·ʔa	'crow'
ɬ	cú·ɬim	'steer'
s	ʔé·se	'claw'
x	túxit	'to make fishing lines'
x̣	ʔex̣ewíkeʔykt	'to go alongside'
h	ʔe·hé	'yes'
m	ʔáma	'island'
n	ʔé·ni	'fool hen'
w	ʔá·wit	'widow'
y	ʔáyi	'younger sister!'
l	ʔá·la	'fire'
p̓	tip̓ut	'lung'
t̓	ʔé·t̓is	'red face paint'
c̓	ʔec̓í·c	'short time'
k̓	ʔé·k̓ex	'magpie'
q̓	ʔó·q̓ox̣c	'ankle'
m̓	cú·ɬim̓ayn	'for the steer'
n̓	tin̓ú·n	'male mountain sheep'
w̓	wá·w̓a	'fish hook'
l̓	kiwkiwíl̓ec	'drum'

Reproduced with permission of the copyright owner. Further reproduction prohibited without permission.

Examples of $V(\cdot)C_1C_2V$:

The combinations found are as follows:

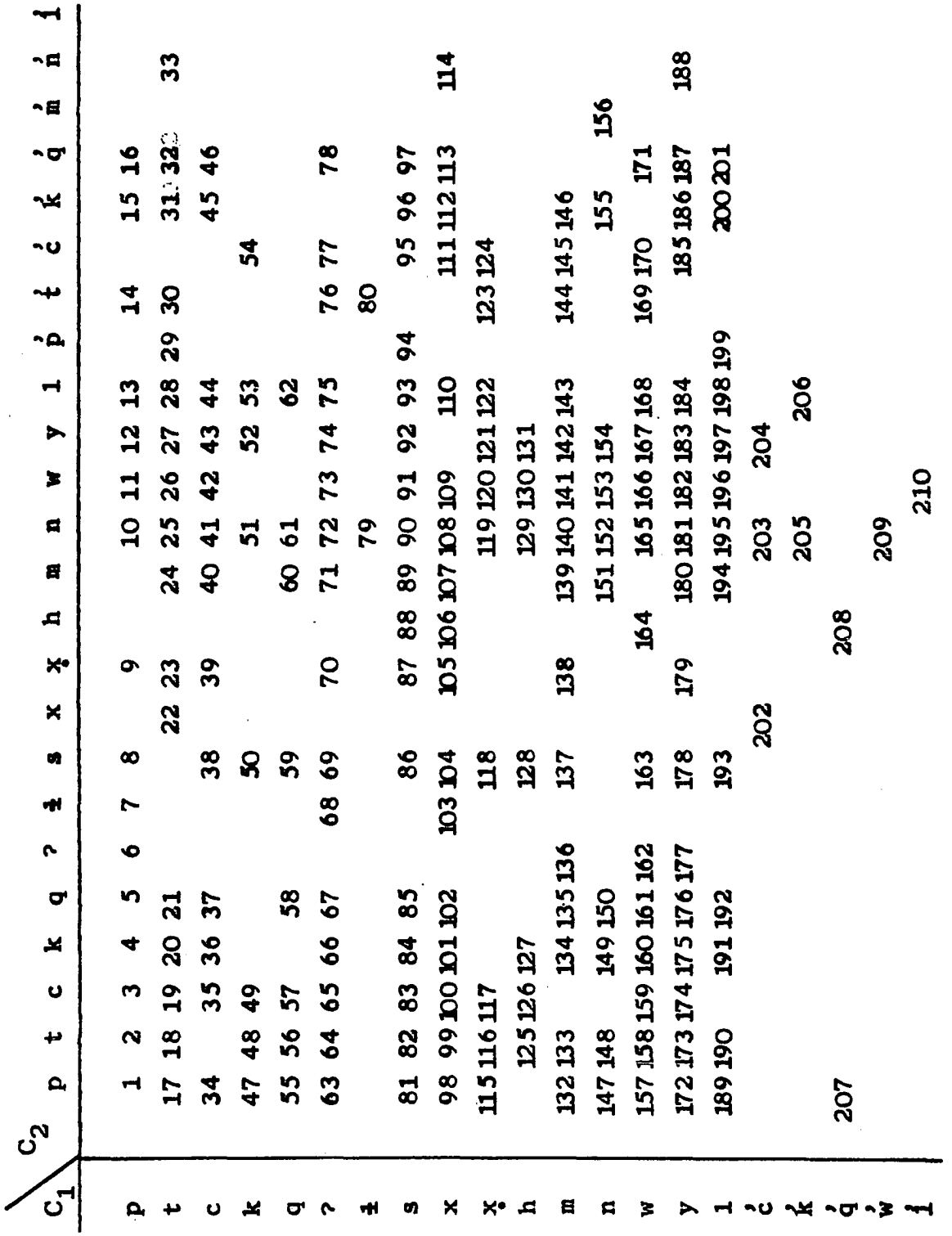

Reproduced with permission of the copyright owner. Further reproduction prohibited without permission.

1.	pp	mit́íppe	'at elderberry'
2.	pt	?isé·ptekey	'parfleche'
3.	pc	?istú·ptupce	'I cut hair'
4.	pk	cá·pki?laksa	'I gather'
5.	pq	he?lepqénut	'without shoes'
6.	p?	hip?ímce	'it is growing'
7.	pɬ	ɬat́ápɬat́ap	'flimsy,' 'easily bent'
8.	ps	niké·pse	'I eat in a hurry'
9.	pχ	χ̣ápχ̣ap	'skin disease'
10.	pn	nex̣sepníx	'quite different'
11.	pw	pilepwé	'four (men)'
12.	py	?icapyó·ckt	'strip of tanned hide'
13.	pl	talí·play	'short pestle'
14.	pt̓	?ipt̓é·se	'I hit'
15.	pk̓	k̓apapk̓ápap	'round'
16.	pq̓	q̓apapq̓ápap	'tight'
17.	tp	weyí·letpu·	'Cayuse'
18.	tt	weqíttise	'I loudly speak'
19.	tc	tex̣téqetce	'I worry'
20.	tk	petkúhtu?	'we will be shooting'
21.	tq	hipetqú·ye	'they drowned'
22.	tx	tátxinma	(place name)
23.	tχ	tχ̣étχ̣et	'spine'
24.	tm	sapátma	'late season'
25.	tn	wisé·tnix	'we have been standing'
26.	tw	títwite·s	'tooth mark'

Reproduced with permission of the copyright owner. Further reproduction prohibited without permission.

27.	ty	pí·ckatyo	'brook trout'
28.	tl̓	tátlo	'ground squirrel'
29.	tṗ	wix̣ci?letṗet	(place name)
30.	tt̓	t̓att̓át	'easy to tear'
31.	tḱ	ḱátḱat	'cut fringes'
32.	tq̓	hipetq̓ulewske	'they came back in a hurry'
33.	tn̓	qí·tn̓es	'smoke hole'
34.	cp	?icpe?stúptupne	'I cut hair'
35.	cc	ḱaccayné·mya?c	'coyote'
36.	ck	lí·ckaw	(place name)
37.	cq̣	qócqoc	'meadowlark'
38.	cs	wa·csaca	'I beat with stick'
39.	cx̣	cicx̣emé·mkt	'elk with one horn'
40.	cm	né·cmi?s	'I wish'
41.	cn	?ipox̣poqácna	'your great grandparent' (object case)
42.	cw	wacwácno	'saddlehorn,' 'pommel'
43.	cy	x̣ax̣a·cyá·ya	'man-like grizzly bear'
44.	cl	wiclekú·pt	'to break in cutting'
45.	cḱ	?icḱátḱatin	'fringes'
46.	cq̓	q̓ocq̓óc	'naked'
47.	kp	?ekpí·ke?ykse	'I trace it'
48.	kt	hí·kte?ke	'cover'
49.	kc	hé·wlekce	'I am disappearing'
50.	ks	?ewní·kse	'I put it'

Reproduced with permission of the copyright owner. Further reproduction prohibited without permission.

51.	kn	cepé·knekt	'to select the best'
52.	ky	wewúkye	'bull elk'
53.	kl	liklí·ce	'I turn'
54.	kć	watikćá·sa	'I step on'
55.	qp	ṕéqpe	'high noon'
56.	qt	hilíwheqteqt	'dead timber'
57.	qc	te·wćíqce	'I talk at night'
58.	qq	hiqqé·wise	'he is drunk'
59.	qs	we?wuqse	'I vomit'
60.	qm	tá·qma·ɬ	'hat'
61.	qn	wisteqné·mit	'gift'
62.	ql	?ipeqlísne	'man's son's child' (object case)
63.	?p	?a?páwaca	'I am putting it'
64.	?t	pe?tú·qes	'man-crazy'
65.	?c	wá·tiwa?ca	'I am wearing belt'
66.	?k	hí·kte?ke	'cover'
67.	?q	septeqepé?qe	'I broke it'
68.	?ɬ	ɬiɬe?ɬíɬe?	'flat'
69.	?s	?a?sakiwka?nya	'I cut his'
70.	?x̣	?e?x̣ilpíse	'I am quarreling with him'
71.	?m	sa?máwas	'belt'
72.	?n	pú·?niks	'he names it'
73.	?w	?é·le?wic	'easy to get'
74.	?y	tí?yet	'laugh'
75.	?l	he?lepqénut	'without shoes'
76.	?ɬ	micyó·x̣?ɬas	'radio'

Reproduced with permission of the copyright owner. Further reproduction prohibited without permission.

77.	ʔc̓	ʔé·le?c̓ayn	'for father's mother'
78.	ʔq̓	lu?q̓í·ckin̓ike·x	'south'
79.	ɨn	káɨna	'wild currant'
80.	ɨt̓	cepé·ɨt̓e?kse	'I flatten'
81.	sp	paspasí·n	'rancid'
82.	st	ʔástay	'awl'
83.	sc	wac̓ás̓casca	'I splash'
84.	sk	tú·skex	'upward'
85.	sq	qé·sqe·s	'dotted,' 'parti-colored'
86.	ss	k̓assáyno	'elbow'
87.	sx̣	c̓ax̣í·sx̣is	'goat'
88.	sh	hiné·shin	'tell them!' (in slow speech)
89.	sm	sismáx̣not	'without shirt'
90.	sn	sayq̓isníx	'very beautiful'
91.	sw	waswásno	'chicken'
92.	sy	yo·syó·s	'blue'
93.	sl	sá·slaqs	'moose'
94.	sp̓	ʔisp̓á·lx̣	'sack'
95.	sc̓	wac̓ás̓casca	'I splash'
96.	sk̓	ʔisk̓í·lʔ	'rock mouse'
97.	sq̓	q̓ós̓qos	'blackbird'
98.	xp	ʔilé·puxpux	'ashes'
99.	xt	tukuxtúkux	'protruding'
100.	xc	ca·xcá·x	'wild onion'
101.	xk	peté·ʔmixki	'they went over'
102.	xq	qiʔyaxqíʔyax	'squawfish'
103.	xɨ	ɨixɨí·ks	'scattered rubbish'

Reproduced with permission of the copyright owner. Further reproduction prohibited without permission.

104.	xs	ʔenú·xsukse	'I know by smell'
105.	xx̣	te·xx̣í·c̓emke	'I was angry because it was cold'
106.	xh	helé·xhewlex	'thin air'
107.	xm	múxmukt	'fish sp.'
108.	xn	tukelixneʔwé·t	'hunter'
109.	xw	ʔacixwá·koʔs	'canteen'
110.	x1	ciʔmtaxlɔ́·yn	'to wear clothes inside out'
111.	xc̓	c̓íxc̓ix	'hay'
112.	xk̓	ta·xk̓ó·mayka	'I became ill from cold'
113.	xq̓	q̓eyexq̓éyex	'young chub'
114.	xn̓	t̓uxn̓ípec	'radio'
115.	x̣p	poxp̣óqc	'great grandparent'
116.	x̣t	tex̣teqétce	'I worry'
117.	x̣c	caqax̣cáqax̣	'small sore'
118.	x̣s	nex̣sepnix	'quite different'
119.	x̣n	sismáx̣not	'without shirt'
120.	x̣w	piwix̣wí·qin	'argument'
121.	x̣y	ʔéx̣yew	'mane'
122.	x̣1	c̓í·x̣lu	'mountain chipmunk'
123.	x̣t̓	t̓éx̣t̓ex̣	'strawberries'
124.	x̣c̓	c̓ɔ́·x̣c̓oqca	'I am sucking'
125.	ht	petkúhtuʔ	'we will be shooting'
126.	hc	hiwehcí·x	'they are barking'
127.	hk	hiweʔynéhkeʔyke	'he took her home'
128.	hs	tiʔnéhse	'(the sun) rises'
129.	hn	mú·hne	'cow' (object case)

Reproduced with permission of the copyright owner. Further reproduction prohibited without permission.

130.	hw	ʔinahwá·latksa	'I carry fire'
131.	hy	teʔnéhyekse	'I am going up hunting'
132.	mp	neʔé·lempe	'my paternal grandmother's place'
133.	mt	té·mtexlikse	'I spread something'
134.	mk	neʔé·lemki	'through my father's mother'
135.	mq	hiyé·mqece	'I cry after'
136.	mʔ	há·mʔawit	'widower'
137.	ms	té·msepseye	'I pack by throwing in'
138.	mx	xoyímxoyim	'alone'
139.	mm	pammí·ʔwacpa	'frequently'
140.	mn	hamná·wisa	'I visit my folks' (of married woman)'
141.	mw	neʔé·lemwecet	'because of my father's mother'
142.	my	pí·tamyalon	'chicken hawk'
143.	ml	weylí·mleks	'stray one' (e.g. a dog)
144.	mt̓	xémt̓uy	'periwinkles'
145.	mc̓	ʔamc̓íya	'I heard it'
146.	mk̓	tamk̓ác̓kac	'hail'
147.	np	ʔinpíse	'I take it'
148.	nt	kuntemelú·kt	'the second' (e.g. son)
149.	nk	ʔenkitipíse	'I am tanning hide'
150.	nq	capalá·nqana	'I was working'
151.	nm	sepú·nmise	'I blow horn'
152.	nn	ʔimí·nne	'gopher' (object case)
153.	nw	ʔínwim	'last year'
154.	ny	konyá	'there'

Reproduced with permission of the copyright owner. Further reproduction prohibited without permission.

155.	nk̓	ʔimu·né·nk̓e	'they also'
156.	nm̓	ʔinm̓é·ks	'my sister'
157.	wp	cik̓í·wpe	'at wife's brother's'
158.	wt	té·wtiʔyese	'I laugh at night'
159.	wc	tamatamáwca	'I throw too far'
160.	wk	ʔaʔsakíwkaʔnya	'I cut his'
161.	wq	tewqeqé·wit	'nightmare'
162.	wʔ	tawʔoxoʔóx̣aca	'I cough at night'
163.	ws	wé·wsese	'I thrash beans'
164.	wh	hilíwheqteqt	'dead timber' (in slow speech)
165.	wn	q̓alawní·n	'beaded'
166.	ww	tewwí·ce	'I cry at night'
167.	wy	pí·wyu·cix	'we separate'
168.	wl	hé·wlekse	'I am disappearing'
169.	wt̓	cá·wt̓alahsasa	'I raise front lock of hair with stiffener'
170.	wc̓	te·wc̓íqce	'I talk at night'
171.	wq̓	q̓aʔáwq̓aʔaw	'white horse'
172.	yp	paypayló·ya	'tattle-tale'
173.	yt	táytay	'little salmon'
174.	yc	pe·lé·yce	'I got lost'
175.	yk	tiwáyka·s	'hair oil'
176.	yq	tayqísa	'I thread'
177.	yʔ	ʔa·twayʔáyn	'for an old woman'
178.	ys	suk̓uysúk̓uy	'dark' (of skin)
179.	yx̣	x̣ayx̣áyx̣	'white'
180.	ym	laymíwt	'small'

Reproduced with permission of the copyright owner. Further reproduction prohibited without permission.

181.	yn	páyna	'I arrived'
182.	yw	mé·ywi	'morning'
183.	yy	hipeyyewicwíye	'they were poor'
184.	yl	miwáyl	'how long?'
185.	yc̓	tuké·yc̓illiks	'I am exhausted'
186.	yk̓	k̓aykáyoc	'raccoon'
187.	yq̓	sayq̓isníx	'very beautiful'
188.	yn̓	wayáwyawn̓as	'fan'
189.	lp	wisalpó?s	'paddle'
190.	lt	taltátki	'with cedar'
191.	lk	?etelkelí·kce	'I am leading'
192.	lq	hiwá·tálqa	'it stopped'
193.	ls	c̓í·lilse	'I curl up'
194.	lm	cílmi	'pine squirrel'
195.	ln	k̓alk̓álna	'maggot'
196.	lw	lawí·lwit	'intelligent'
197.	ly	cilyé·x̣ne	'fly' (object case)
198.	ll	tillá·pca	'I am lonesome'
199.	lp̓	cilp̓ú·?	'ace' (of cards)
200.	lk̓	k̓álk̓al	'maggot'
201.	lq̓	pá·lq̓allay	'both ends'
202.	c̓x	xic̓xí·c	'rubber'
203.	c̓n	?iné·c̓nehwewitise	'it is going downstream'
204.	c̓y	mic̓yó·x̣o?t̓as	'radio'
205.	k̓n	?iné·k̓nikt	'band' (of people)
206.	k̓l	titek̓lú·yni?n	'pigeon-toed'
207.	q̓p	seq̓píse	'I am scratching'

Reproduced with permission of the copyright owner. Further reproduction prohibited without permission.

208. q̓h hoq̓hó·q̓ 'hog'

209. ẃn ʔew̓ní·kse 'I put it'

210. ẃ ʔeẃice 'I spend winter'

Examples of $V(\cdot)C_1C_2C_3V$:

The combinations found are as follows:

C_2	C_3	C_4 p	t	c	k	q	ʔ	s	x̣	m	n	w	y	l	t̓	c̓	k̓	q̓
p	c					1			2					3				
	k							4										
	ʔ									5				6				
	s			7		8												
	x										9							
t	k							10				11						
	q							12										
	x													13				
	x̣	14	15	16	17			17										
c	p				18													
k	s	19	20										21					
q	c							22			23	24						
	s		25							26								
ʔ	p								27						28			
	t							29										
	c							30			31							
	k							32										
	q							33										
	s		34								35	36						
	x									37								
	x̣							38						39				
	m	40		41		42						43		44				
	n	45									46		47					
	w							48										
	y				49			50			51		52					53
	l											54						
ł	k							55										
s	k							56										

Reproduced with permission of the copyright owner. Further reproduction prohibited without permission.

C_2	C_3	C_4 p	t	c	k	q	ʔ	s	x̣	m	n	w	y	l	t̓	c̓	k̓	q̓
x	p				57													
	c										58	59					60	
	ʔ													61				
	s		62	63														
x̣	c						64											
	s			65														
h	p							66										
	t							67										
m	c				68													
	k							69										
	s		70	71													72	
n	p							73										
	ʔ								74									
w	k							75										
	ʔ												76		77			
	s											78						
	x				79													
	n												80					
y	k							81										
	q							82			83							
	s										84							
	x̣															85		
l	p̓							86	87									
	k̓							88										
	q̓							89										
	s		90															
	x			91														
	x̣	92									93							

1. pcq ʔipcqí·tit 'bird with long bill'
2. pcx̣ capcx̣iláyksa 'I sweep'
3. pcl lapcláp c 'covered all over'
4. pks ʔecu·yeʔípkse 'I am cultivating'

Reproduced with permission of the copyright owner. Further reproduction prohibited without permission.

5.	p?n	cúp?nit	'emerge from timber'
6.	p?l	hip?látaca	'he goes mining'
7.	psc	qépsce	'I close eyes'
8.	psq	?ipsqíke?ykse	'I walk'
9.	pxn	tasí·pxne	'cow elk' (object case)
10.	tks	cú·yeti·pitkse	'I make it smooth'
11.	tkw	petkwéhtu?	'we will be shooting'[5]
12.	tqs	wasátqsa	'I whip'
13.	txl	litxlítx	'bushy'
14.	txp	pitxpá·ma	'mother's brothers'
15.	txt	?atxtó·ca	'I am sneaking up on it'
16.	txc	?átxcapsa	'I shoot it lengthwise'
17.	txs	hitxsáwksa	'it is echoing'
18.	cpk	poxpoqácpkiníx	'from great grandparent's'
19.	ksp	cí·kspe	'at sister-in-law's' (a woman speaking)
20.	kst	čí?lá·kstin	'deer claw bells'
21.	ksy	hi·semtuksyé·ye	'luminary (personified)'
22.	qcs	?oylaqcsiki·wpa	'six days before or after'
23.	qcn	?inípoxpoqcna	'my great grandparent' (object case)
24.	qcw	?oylá·qcwa	'six (men)'
25.	qst	teqsté·qs	'fern'
26.	qsm	maqsmáqs	'yellow'

[5] HW gave this form, which is noted as of lower dialect by EPW.

Reproduced with permission of the copyright owner. Further reproduction prohibited without permission.

27.	?pχ	χe?pχé?p	'sneaky'
28.	?pt̓	?e?pt̓é·se	'I hit it'
29.	?ts	sapá?tsa	'I let it out'
30.	?cs	sapá?csa	'I let it in'
31.	?cn	?ele?cnú·t	'without paternal grandmother'
32.	?ks	hí·kte?kse	'I cover'
33.	?qs	?icepé?qse	'I cut'
34.	?st	?icpe?stú·ptupne	'I cut hair'
35.	?sn	sewi?sníme	(place name)
36.	?sw	teqepsi?swíye	'he made me upset'
37.	?xm	kú?xmac	'several'
38.	?χs	he?χsi?milwí·se	'he eats much'
39.	?χl	la?χlá?χ	'powdery'
40.	?mp	hí·ti?mpe?qs	'I broke it with knee'
41.	?mc	hí·ti?mce	'I am kneeling'
42.	?mq	?ilsté·?mqet	'partly burned tree'
43.	?mw	sá?mwa·ca	'I wear a belt'
44.	?ml	hí·ti?mlikse	'I am about to kneel'
45.	?np	?e?npíse	'I arrest him'
46.	?nn	ti?nnúx	'quick death'
47.	?ny	?a?sakíwka?nya	'I cut it for him'
48.	?ws	ce·pé?wse	'I select'
49.	?yk	hiwe?ynéhke?yke	'he took her with him'

Reproduced with permission of the copyright owner. Further reproduction prohibited without permission.

50.	?ys	pé·nya?ysa	'he makes it for someone'
51.	?yn	to?yn6?ayn	'crupper'
52.	?yy	?a?yyí?c	'dangerous'
53.	?yq̓	pik̓un?ma?yq̓á·1	'September'
54.	?1w	ha?1wíya	'I went for nothing'
55.	ɬks	co·1ahóɬksa	'I slip it off'
56.	sks	waté·sksa	'I turn it off'
57.	xpk	wepsú·xpkiṅike	'right hand'
58.	xcn	1éq̓excne	(place name)
59.	xcw	1oxcwí·sa	'I am industrious'
60.	xck̓	hinúxck̓omayn	'to be sick from smell'
61.	x?1	ta·x?lá·twisa	'I am tired from freezing'
62.	xst	x̣ú·xsteyn	'to guess wrong'
63.	xsc	pik̓é·xsce	'I am unlucky'
64.	x̣c?	wix̣c?útekey	'pillow,' 'cushion'
65.	x̣sc	?emú·x̣sce	'I swallow it'
66.	hps	hiwwé·plehpse	'I imagine'
67.	hts	tukéhtse	'I am shooting'
68.	mck	temckileyleké·t	'grasshopper-like insect'
69.	mks	q̓uyímkse	'I drag'
70.	mst	?emsteqe?énpse	'I am answering him'
71.	msc	?emscú·kwece	'I understand'
72.	msk̓	hímsk̓uye	'dirty mouth (with food)'
73.	nps	?emsteqe?énpse	'I am answering him'

Reproduced with permission of the copyright owner. Further reproduction prohibited without permission.

74.	n?m	pi̓kun?ma?yq̓á·1	'September'
75.	wks	hitx̣sáwksa	'it is echoing'
76.	w?y	yi?yé·w?yew	'all of a sudden'
77.	w?t̓	waw?t̓í·liyaxc	'woodpecker sp.'
78.	wsw	pewswé·lu·ye	'we are going down'
79.	wxk	kewxké·wx	'brown'
80.	wny	yawnyá·ya	'Cold' (a mythical figure)
81.	yks	?iné·tepeleykse	'I am getting confused by talking so much'
82.	yqs	wehéyqse	'I put a necklace on'
83.	yqn	wehéyqne	'necklace' (object case)
84.	ysn	?aysníma	(place name)
85.	yx̣c̓	q̓oyx̣c̓á·1	'July'
86.	lps	tuké·pilpse	'I carry in arms'
87.	lpx̣	x̣álpx̣alp	'mythical figure on cloud'
88.	lks	?o·ci̓kí·lksa	'I spoil it'
89.	lqs	wa·tálqsa	'I stop'
90.	lst	?ilsté·mqet	'partly burned tree'
91.	lxc	cálxcalx	'cricket'
92.	lx̣p	qoqalx̣pípam	'among buffaloes'
93.	lx̣n	?ilx̣ní·wisix	'we increased in number'

Reproduced with permission of the copyright owner. Further reproduction prohibited without permission.

Examples of V(·)$C_1C_2C_3C_4$V:

?psq	hi?psqíke?ykse	'he is walking'
?cks	capti?wacá?cksa	'I am ready to shoot'
?mks	?eqsímteqeti?mkse	'I am throwing it in anger'
?npt	?e?nptέ·ce	'I go to get it'
?nks	?iyé·ti?nkse	'I will drown'
?yks	hi?psqíke?ykse	'he is walking'
?lqs	?ehísi?lqse	'I am moistening'
ptks	?átx̣captksa	'I shoot it lengthwise'
psks	walápsksa	'I jerk it away'
wtks	weqíwtkse	'I am cutting grass'
wx̣c?	?ewx̣c?úpe?qe	'I broke it by sitting'
lpsc	q̓í·lpsce	'I snap eyes at'
lpsk	k̓alpskísa	'I eat from the bones'

Reproduced with permission of the copyright owner. Further reproduction prohibited without permission.

200. MORPHOPHONEMICS

Nez Perce has 17 morphophonemes represented by phonemic alternations. These morphophonemes are in two groups:

1. ‖c‖, ‖k‖, ‖q‖, ‖ʔ‖, ‖ːː‖, ‖k^{w}‖, ‖q^{w}‖, ‖h‖, ‖H‖, ‖^‖, ‖e‖, ‖u‖, ‖_‖, ‖-‖
2. ‖r‖, ‖r_{i}‖, ‖R‖.

210. The members of the first group show the following phonemic alternation:

‖c‖ : /s/ before ‖n‖ or ‖w‖, and /c/ elsewhere, e.g.,

‖yúʔc‖ : /yúʔc/ 'poor,' 'pitiful'

‖yúʔcne‖ : /yúʔsne/ 'poor' (object case)

‖ʔuylé·qc‖ : /ʔoylá·qc/ 'six'

‖ʔuylé·qcwe‖ : /ʔoylá·qswa/ 'six' (of men)

‖k‖ : /x/ before ‖k‖, ‖q‖, ‖n‖, ‖l‖ or ‖+‖; /k/ elsewhere, e.g.,

‖cemitékki‖ : /cemitéxki/ 'with huckleberry'

‖ʔiyelí·kqewne‖ : /ʔiyalí·xqawna/ 'I drifted by'

‖cemitknú·t‖ : /cemitxnú·t/ 'without huckleberry'

‖cemitéklеykin‖ : /camitáxlaykin/ 'near huckleberry'

Reproduced with permission of the copyright owner. Further reproduction prohibited without permission.

‖cemí·tk‖ : /cemí·tx/ 'huckleberry'

‖cemitk'éyn‖ : /camitḱáyn/ 'for huckleberry'

‖q‖ : /x̣/ before ‖k‖, ‖n‖, ‖l‖, or ‖+‖; /q/ elsewhere, e.g.,

‖hickilí·tuqkike‖ : /hickilí·toxkika/

'he went on back'

‖hićí·qne‖ : /hićí·x̣ne/ 'he spoke'

‖ćí·qlu‖ : /ćí·x̣lu/ 'talking squirrel'

‖tú·q‖ : /tú·x̣/ 'tobacco'

‖tú·qise‖ : /tú·qise/ 'I smoke tobacco'

‖'‖ : ∅ after ‖?‖ or ‖'‖; /'/ after other stops; /?/ elsewhere, e.g.,

‖tísqe?‖ : /tísqe?/ 'skunk'

‖tisqe?'éyn‖ : /tisqa?áyn/ 'for skunk'

‖'iḿ'í·s‖ : /?iḿí·s/ 'your mother'

‖te?éx̣et'u‖ : /te?éx̣et́u/ 'just a youngster'

‖'iní·t‖ : /?iní·t/ 'house'

‖:‖ : /?/ $\overset{f}{\sim}$ /·/, e.g.,

‖helxpí́·s‖ : /halxpí?s/ $\overset{f}{\sim}$ /halx̣pí·s/ 'all day'

‖h‖ : ∅ after a consonant at normal speed; /h/ elsewhere, e.g.,

‖hiné·shin‖ : /hiné·sin/ 'tell them!'

‖héhen‖ : /héhen/ 'stem,' 'vine'

Reproduced with permission of the copyright owner. Further reproduction prohibited without permission.

‖H‖ : a homorganic unglottalized stop before a glottalized stop; the same consonant before a sonorant (‖m‖, ‖n‖, ‖l‖); and Ø elsewhere, e.g.,

‖ḱúyc‖ : /ḱúyc/ 'nine'

‖peHḱúyc‖ : /pekḱúyc/ 'nine each'

‖lepít‖ : /lepít/ 'two'

‖peHlepít‖ : /pellepít/ 'two each'

‖pú·timt‖ : /pú·timt/ 'ten'

‖peHpú·timt‖ : /pepú·timt/ 'ten each'

‖ˆ‖.

With vowels. ‖V̂‖ : /V/ when ‖ˆ‖ occurs with the first vowel in a word or with the third vowel which follows a consonant cluster; and Ø elsewhere, e.g.,

‖mîc'îkú·ynekse‖ : /mićkú·ynekse/ 'I believe'

‖himîc'îkú·ynekse‖ : /himćikú·ynekse/ 'he believes'

‖mîc'i·se‖ : /mićí·sa/ 'I hear'

‖'emîc'i·se‖ : /ʔamćí·sa/ 'I hear someone else's'

‖'ené·smîc'ise‖ : /ʔaná·smićisa/ 'I hear them'

‖hipe'îlelé?emkse‖ : /hipaʔlalá?amksa/

'they are all burned up'

With length. ‖ˆ‖ : /·/ when ‖ˆ‖ occurs after the first or third vowel after ‖+‖; and Ø elsewhere, e.g.,

‖hîˆmiyece‖ : /hí·miyaca/ 'I lick'

‖hihîˆmiyece‖ : /hihímiyaca/ 'he licks'

Reproduced with permission of the copyright owner. Further reproduction prohibited without permission.

‖'é^yewise‖ : /ʔé·yewise/ 'I am peaceful'

‖hi'é^yewise‖ : /heʔéyewise/ 'he is peaceful'

With length and ‖R‖. ‖^‖ is Ø in the reduplication and /·/ elsewhere, e.g.,

‖té^mul‖ : /té·mul/ 'hail'

‖R té^mul‖ : /temulté·mul/ 'sleet'

‖k^W‖. ‖k^WV‖ : /ku/ after ‖^‖ with the second vowel after ‖+‖; /kV/ elsewhere, e.g.,

‖tûk^{W}eylé·kse‖ : /tukeylé·kse/ 'I drive down'

‖hitûk^{W}eylé·kse‖ : /hitkuylé·kse/ 'he drives down'

‖q^W‖. ‖q^WV‖ : /qu/ after ‖^‖ with the second vowel after ‖+‖; /qV/ elsewhere, e.g.,

‖tûq^{W}eléhnece‖ : /tuqeléhnece/ 'I swim down'

‖hitûq^{W}eléhnece‖ : /hitquléhnece/ 'he swims down'

Nez Perce has extensive vowel harmony. In a harmonic sequence, which is bounded by ‖-‖ or ‖+‖, and is either coterminous with or smaller than a morphophonemic word, either the set /i/, /a/, /o/ or the set /i/, /e/, /u/ is found. The following four morphophonemes, ‖e‖, ‖u‖, ‖_‖, and ‖-‖ describe the harmony. Among older speakers, the

Reproduced with permission of the copyright owner. Further reproduction prohibited without permission.

harmonic sequences are frequently coterminous with morphophonemic words. Consequently, the occurrence of harmonic sequence boundary marker, ‖-‖, is very infrequent, the main exception being foreign loans.

‖e‖ : /a/ with ‖_‖ within the same harmonic sequence bounded by ‖-‖ or ‖+‖; /e/ elsewhere, e.g.,

‖tú·te?‖ : /tó·ta?/ 'father' (vocative)

‖'í·te?‖ : /?i·te?/ 'mother' (vocative)

‖pîléqe?‖ : /piláqa?/ 'grandmother' (vocative) (maternal grandmother)

‖cewitk'éyn‖ : /cawitḱáyn/ 'for wild carrot'

‖lém-he·y‖ : /lémha·y/ 'the Lemhi River, Idaho'[6]

‖u‖ : /o/ with ‖_‖ within the same harmonic sequence bounded by ‖-‖ or ‖+‖; /u/ elsewhere, e.g.,

‖su·yé·pu·‖ : /so·yá·po·/ 'the white people'

‖tewé·pu·‖ : /tewé·pu·/ 'people of Orofino, Idaho'

‖tu?úynu‖ : /tu?úynu/ 'tail'

‖tu?ynú'eyn‖ : /to?ynó?ayn/ 'crupper,' 'for the tail'

‖cú·łim-'eyn‖ : /cú·łiḿayn/ 'for the steer'[7]

---

[6]Lemhi, originally Limhi, was named after a king by Mormon immigrants in the area ca. 1855.

[7]/cú·łim/ 'steer' is a loan from Salish.

Reproduced with permission of the copyright owner. Further reproduction prohibited without permission.

‖_‖. ‖e‖ : /a/, ‖u‖ : /o/, ‖i‖ : /i/. ‖_‖ is phonemically ∅, e.g.,

‖né·qc‖ : /ná·qc/ 'one'

‖tú·te?‖ : /tó·ta?/ 'father' (vocative)

‖cí·ce?‖ : /cí·ca?/ 'paternal aunt' (vocative)

‖-‖ (harmonic sequence boundary marker) is phonemically ∅, e.g.,

‖lém-he·y‖ : /lémha·y/ 'the Lemhi River, Idaho'

‖cú·ɬim-'eyn‖ : /cú·ɬim̓ayn/ 'for steer'

220. The members of the second group are morphophonemes of reduplication.

‖r‖ : /he/ before ‖?i‖ or ‖'i‖; /hV/ before ‖?V‖ or ‖'V‖ (V representing ‖e‖ or ‖u‖); elsewhere a sequence of a consonant and a vowel corresponding to the initial CV, e.g.,

‖'ískit‖ : /?ískit/ 'trail'

‖r 'ískit‖ : /he?ískit/ 'trails'

‖'éhew‖ : /?éhew/ 'wounded'

‖r 'éhew‖ : /he?éhew/ 'wounded' (distributive)

‖hé·cwel‖ : /há·cwal/ 'son'

‖r hé·cwel‖ : /hahácwal/ 'sons'

Reproduced with permission of the copyright owner. Further reproduction prohibited without permission.

‖r_i‖ : a sequence of the following consonant and /i/, e.g.,

‖t̲é?c‖ : /tá?c/ 'good'

‖r_i t̲é?c‖ : /titá?c/ 'good' (distributive)

‖x̣̲é?wic‖ : /x̣á?wic/ 'sharp' (of points)

‖r_i x̣̲é?wic‖ : /x̣ix̣á?wic/ 'sharp' (distributive)

‖R‖ : complete reduplication of the following stressed sequence, e.g.,

‖qí?ye̲x‖ : /qí?yax/ 'squawfish'

‖R qí?ye̲x‖ : /qi?yaxqí?yax/ 'little squawfish'

‖mé̲qs‖ : /máqs/ 'gall'

‖R mé̲qs‖ : /maqsmáqs/ 'yellow'

‖'ílp‖ : /?ílp/ 'reddish skin eruption'

‖R 'ílp‖ : /?ilp̓ílp/ 'red'

‖'é̲ys‖ : /?áys/ 'parsnip sp.'

‖R 'é̲yc‖ : /?ayc̓áyc/ 'parsnip sp.'

230. Morphophonemic sequences.

‖ewe‖ and ‖éwe‖ are phonemically /u·/, /o·/, /ú·/, /ó·/.

‖ewé‖ : /ewé/ or /awá/.

‖weyíkniku?‖ : /weyíxniku?/ 'I will be flying around'

‖peweyíkniku?‖ : /pu·yíxniku?/ 'we will be flying around'

Reproduced with permission of the copyright owner. Further reproduction prohibited without permission.

‖wé·yiksik‖ : /wé·yiksix/ 'we are going across'

‖sîtéweyiksik‖ : /sitú·yiksix/ 'we are looking across'

‖weptemẹ́wne‖ : /waptamáwna/ 'I murdered'

‖'ewẹptemẹ́wne‖ : /ʔo·ptamáwna/ 'I murdered (somebody else's)'

‖wẹ́·pci?yẹwcik‖ : /wá·pci?yawcix/ 'we are killing'

‖'ewépci?yẹwcik‖ : /ʔó·pci?yawcix/ 'we are killing (somebody else's)'

‖wẹ́wyẹce‖ : /wáwyaca/ 'I beat with stick'

‖'ewẹ́wyẹce‖ : /ʔawáwyaca/ 'I beat (somebody else's)'

There are following exceptions:

‖mẹ́wẹ‖ : /máwa/ 'when'

‖t̓ẹ́wẹ‖ : /t̓áwa/ 'well ...'

‖k̓ẹ́wẹ‖ : /k̓áwa/ 'so much,' 'that much'

‖kéweye‖ : /kéweye/ 'let them'

‖wẹ?lẹ́wẹ‖ : /wa?láwa/ 'Wallawa, Wash.'

‖'ipẹ́wẹce‖ : /ʔipáwaca/ 'I put in papoose'

‖VhV‖ and ‖V'V‖ show the following:

‖V_1hV_2‖ : /V_2·/ $\overset{f}{\sim}$ /V_2hV_2/

‖heqtí·se‖ : /heqtí·se/ 'I am getting old'

‖hiheqtí·se‖ : /he·qtí·se/ $\overset{f}{\sim}$ /heheqtí·se/ 'he is getting old'

Reproduced with permission of the copyright owner. Further reproduction prohibited without permission.

‖V_1h$\acute{V}_2$‖ : /V_2h$\acute{V}_2$/

‖hé·sce‖ : /hé·sce/ 'I breathe'

‖hihé·sce‖ : /hehé·sce/ 'he breathes'

‖V_1'V_2‖ : /V_2ʔV_2/

‖'eiwice‖ : /ʔeiwice/ 'I spend winter'

‖hi'eiwice‖ : /heʔeiwice/ 'he spends winter'

‖V_1'$\acute{V}_2$‖ : /V_2ʔ$\acute{V}_2$/

‖'é·yewise‖ : /ʔé·yewise/ 'I am peaceful'

‖hi'é·yewise‖ : /heʔéyewise/ 'he is peaceful'

Reproduced with permission of the copyright owner. Further reproduction prohibited without permission.

300. CONSONANT AND VOWEL SYMBOLISM

An interesting feature of Nez Perce is the occurrence of consonant and vowel alternation, mainly with augmentative-diminutive significance. /s/, /n/, /k/, and /e/ as non-diminutive forms are paralleled by /c/, /l/, /q/, and /a/ as diminutive forms. The diminutive forms indicate smallness in size, possession by the first person (in kinship terms), verisimilitude, or contempt (in tribal names). These diminutives often occur with ‖R‖.

s ~ c:

‖pé·su·yece‖ : /pé·su·yece/ 'he rocks (a child)'

‖pé·cu·yece‖ : /pé·cu·yece/ 'he rocks (a baby)'

‖R wés nu‖ : /waswásno/ 'chicken'

‖R wéc nu‖ : /wacwácno/ 'saddle horn'

‖ne?yé·c‖ : /na?yá·c/ 'my elder brother'

‖'imyé·s‖ : /?imyá·s/ 'your elder brother'

‖ne?cí·c‖ : /na?cí·c/ 'my paternal aunt'

‖'imsí·s‖ : /?imsí·s/ 'your paternal aunt'

‖'iskí·cu?mix‖ : /?iskí·cu?mix/ 'Coeur d'Alene'

‖'ickí·cu?mix‖ : /?ickí·cu?mix/ 'Coeur d'Alene' (in derision)

Reproduced with permission of the copyright owner. Further reproduction prohibited without permission.

n ~ l:

‖hité·mn̓es‖ : /hité·mn̓es/ 'book' ({hité·me} 'read')

‖kiwkiwíl̓ec‖ : /kiwkiwíl̓ec/ 'drum' ({kiwkiwí} 'beat')

‖ʾiceyé·ye-qen‖ : /ʔiceyé·yeqan/ 'young coyote' ({ʾiceyé·ye} 'coyote') cf. ‖qel‖ in 'dog' below.

k ~ q:

‖sík̓em‖ : /sík̓em/ 'horse'

‖ciq̓é·mqel‖ : /ciq̓á·mqal/ 'dog'

e ~ a:

‖sé·x‖ : /sé·x/ 'onion'

‖R cé·x‖ : /ca·xcá·x/ 'wild onion'

‖ké·tis‖ : /ké·tis/ 'spear'

‖R ké^tic‖ : /katické·tic/ 'toy spear'

Reproduced with permission of the copyright owner. Further reproduction prohibited without permission.

CHAPTER TWO

MORPHOLOGY

400. INTRODUCTION

The Nez Perce morphological word is a sequence of one or more morphemes between successive morphological word junctures symbolized as {+}. {+} is represented by free alternation of ‖+‖ and Ø, e.g.,

{yuq + ʾipním + ʾiní·t} 'that house of his'

: ‖yuq + ʾipním + ʾiní·t‖ $\overset{f}{\sim}$ ‖yuq + ʾipním ʾiní·t‖

$\overset{f}{\sim}$ ‖yuq ʾipním + ʾiní·t‖ $\overset{f}{\sim}$ ‖yuq ʾipnim ʾiní·t‖

: /yox̣ + ʔipním + ʔiní·t/ $\overset{f}{\sim}$ /yox̣ + ʔipníminí·t/

$\overset{f}{\sim}$ /yoq̓ipním + ʔiní·t/ $\overset{f}{\sim}$ /yoq̓ipníminí·t/.

The morphological word is either identical with or larger than the theme, which in turn, is either identical with or larger than the stem.

There are three morphological word classes internally defined: substantives, verbs, and particles. These are differentiated by discrete sets of affixes or by the absence of affixes.

Reproduced with permission of the copyright owner. Further reproduction prohibited without permission.

500. SUBSTANTIVES

Substantive stems are discussed in 510 and substantive themes are discussed in 520.

510. Substantive stems.

There are six stem classes.

510.1 General noun stems (nS) : one or two general noun root morphemes.

There are three factors determining the allomorphs of general noun stems, the first of these is morphological, the others are phonological: (1) the absence or presence of affixes, (2) the absence or presence of stress in the affix, (3) whether or not the initial consonant of the suffix is a voiced continuant. The combination of these three results in five sets of environments:

I: no affixes

II: followed by an unstressed suffix with initial voiced continuant, e.g., {nim}, {ne}

III: followed by an unstressed suffix with initial voiceless stops, e.g., {pe}, {cim}, {k}, {kek}, {ki}, {kiṅik}

IV: followed by a stressed suffix with initial voiced continuant, e.g., {lɛ́ykin}, {níme}, {nú·t}

Reproduced with permission of the copyright owner. Further reproduction prohibited without permission.

V: followed by a stressed suffix with initial voiceless stops or glottalization, e.g., {pípem}, {'eyn}.

The alternation between allomorphs of a general noun may be summarized as a difference in the number of segments, in length, and in stress.

Of segmental differences there is but one, namely, the stem final t, which alternates with zero in environments II and IV. Others involve vowels, the most frequent being the alternation between CV́(·)CC in environment I and CVCV́C in environments II and III.

Length difference may be observed in the alternation between final short vowels in environments I, IV, and V and final long vowels in II and III. This alternation is morphologically conditioned.

Stress difference is generally characterized by stressed allomorphs in environments I, II, and III and stressed allomorphs in IV and V. Though there are exceptions, allomorphs in II and III tend to occur with the stress placed closer to the stem-final position than in I.

Reproduced with permission of the copyright owner. Further reproduction prohibited without permission.

The types of allomorphy and examples are as follows:

(1) {wexwéqt} type. The members of this type have six allomorphs, two forms in environment V. An example is {wexwéqt} 'frog.'

I: {wexwéqt +} : ‖wexwéqt‖ : /wexwéqt/ 'frog'

II: {wexwéqt ne} : ‖wexweqé ne‖ : /wexweqéne/ 'frog' (object)

III: {wexwéqt pe} : ‖wexweqét pe‖ : /wexweqétpe/ 'at the frog'

IV: {wexwéqt nime} : ‖wexweqe nime‖ : /wexweqenime/ 'Frog-Place'

Va: {wexwéqt 'éyn} : ‖wexweqt -'éyn‖ : /wexweq'áyn/ 'for a frog'

Vb: {wexwéqt pipem} : ‖wexweqet pipem‖ : /wexweqetpipem/ 'among frogs'

(2) {telétet} type. The members of this type have five allomorphs. An example is {telétet} 'cedar.'

I: {telétet +} : ‖telétet‖ : /talátat/ 'cedar'

II: {telétet ne} : ‖telté ne‖ : /taltána/ 'cedar' (object)

Reproduced with permission of the copyright owner. Further reproduction prohibited without permission.

III: {te1étet pe} : ‖te1tét pe‖ : /ta1tátpa/
'at the cedar'

IV: {te1étet níme} : ‖te1te níme‖ : /ta1taníma/
'Cedar-Place'

V: {te1étet pípem} : ‖te1tet pípem‖ : /ta1tatpípam/
'among cedars'

(3) {cé·qet} type. The members of this type have four allomorphs. An example is {cé·qet} 'raspberry.'

I: {cé·qet +} : ‖cé·qet‖ : /cé·qet/ 'raspberry'

II: {cé·qet ne} : ‖ceqé· ne‖ : /ceqé·ne/
'raspberry' (object)

III: {cé·qet pe} : ‖ceqé·t pe‖ : /ceqé·tpe/
'at raspberry'

IV and V: {cé·qet níme} : ‖ceqet níme‖ : /ceqetníme/
'Raspberry-Place'

{cé·qet pípem} : ‖ceqet pípem‖ : /ceqetpípem/
'among raspberries'

(4) {té·mses} type. The members of this type have four allomorphs. An example is {té·mses} 'wild rose.'

I: {té·mses +} : ‖té·mses‖ : /tá·msas/ 'wild rose'

Reproduced with permission of the copyright owner. Further reproduction prohibited without permission.

II and III: {tɛ́·mses nim} : ‖tesɛ́·s nim‖
: /tamsá·snim/ 'wild rose' (possessive-nominative)
{tɛ́·mses pe} : ‖temsɛ́·s pe‖ : /tamsá·spa/
'at the wild rose'

IV: {tɛ́·mses nú·t} : ‖temses nú·t‖ : /tamsasnó·t/
'without wild rose'

V: {tɛ́·mses ʼéyn} : ‖temsɛ·s éyn‖ : /tamsa·sáyn/
'for wild rose'

(5) {qɛ́·msit} type. The members of this type have four allomorphs. An example is {qɛ́·msit} 'kows' (edible root) (lomatium kaus).

I and III: {qɛ́·msit +} : ‖qɛ́·msit‖ : /qá·msit/
'kows'

II: {qɛ́·msit ne} : ‖qɛ́·msi ne‖ $\overset{f}{\sim}$ ‖qɛ́·msit ne‖
: /qá·msina/ $\overset{f}{\sim}$ /qá·msitna/ 'hows' (object)

IV: {qɛ́·msit nú·t} : ‖qemsi nú·t‖ $\overset{f}{\sim}$ ‖qemsit nú·t‖
: /qamsinó·t/ $\overset{f}{\sim}$ /qamsitnó·t/ 'without kows'

V: {qɛ́·msit pípem} : ‖qemsit pípem‖ : /qamsitpípam/
'among kows'

Reproduced with permission of the copyright owner. Further reproduction prohibited without permission.

(6) {qeqí·t} type. The members of this type have four allomorphs, with two freely alternating allomorphs each in environments II and III. An example is {qeqí·t} 'root somehwat like kows.'

I: {qeqí·t +} : ‖qeqí·t‖ : /qeqí·t/ 'qeqí·t'

II: {qeqí·t ne} : ‖qeqí· ne‖ $\overset{f}{\sim}$ ‖qeqí·t ne‖
: /qeqí·ne/ $\overset{f}{\sim}$ /qeqí·tne/ 'qeqí·t' (object)

III: {qeqí·t pe} : ‖qeqí·t pe‖ $\overset{f}{\sim}$ ‖qeqiyít pe‖
: /qeqí·tpe/ $\overset{f}{\sim}$ /qeqiyítpe/ 'at qeqí·t'

IV and V: {qeqí·t pípem} : ‖qeqi·t pípem‖ :
/qeqi·tpípem/ 'among qeqí·t'
{qeqí·t nú·t} : ‖qeqi·t nú·t‖ : /qeqi·tnú·t/
'without qeqí·t'

(7) {pé·ps} type. The members of this type have three allomorphs. An example is {pé·ps} 'red fir tree.'

I: {pé·ps +} : ‖pé·ps‖ : /pá·ps/ 'red fir tree'

II and III: {pé·ps nim} : ‖pepés nim‖ : /papásnim/
'red fir tree' (possessive-nominative)

IV and V: {pé·ps pípem} : ‖peps pípem‖ : /papspípam/
'among red fir trees'

Other examples in this type are {sí·ks} 'nest,' {pí·ps} 'bone,' {ʼé·yx̣} 'white salmon.'

Reproduced with permission of the copyright owner. Further reproduction prohibited without permission.

(8) {ɬiɬé·n} type. The members of this type have three allomorphs. An example is {ɬiɬé·n} 'bitterroot.'

I, II and III: {ɬiɬé·n +} : ‖ɬiɬé·n‖ : /ɬiɬá·n/ 'bitterroot'

{ɬiɬé·n ne} : ‖ɬiɬé·n ne‖ : /ɬiɬá·nna/ 'bitterroot' (object)

{ɬiɬé·n k} : ‖ɬiɬé·n k‖ : /ɬiɬá·nx/ 'to bitterroot'

IV: {ɬiɬé·n nú·t} : ‖ɬiɬen nú·t‖ : /ɬiɬannó·t/ 'without bitterroot'

V: {ɬiɬé·n pípem} : ‖ɬiɬe·n pípem‖ : /ɬiɬa·npípam/ 'among bitterroots'

(9) {yé·ke?} type. The members of this type have two allomorphs. An example is {yé·ke?} 'brown bear.'

I, II and III: {yé·ke? +} : ‖yé·ke?‖ : /yá·ka?/ 'brown bear'

{yé·ke? ne} : ‖yé·ke? ne‖ : /yá·ka?na/ 'brown bear' (object)

{yé·ke? pe} : ‖yé·ke? pe‖ : /yá·ka?pa/ 'at the brown bear'

IV and V: {yé·ke? níme} : ‖yeke? níme‖ : /yaka?níma/ 'Brown Bear Place'

{yé·ke? pípem} : ‖yeke? pípem‖ : /yaka?pípam/ 'among brown bears'

Reproduced with permission of the copyright owner. Further reproduction prohibited without permission.

The frequency of the nine types in a sample of 52 general noun stems is:

Type	Environments						Number of Allomorphs	Frequency (per cent)
	I	II	III	IV	V			
{wexwéqt}	1	2	3	4	5	6	6	1.9
{telétet}	1	2	3	4	5		5	3.8
{cé·qet}	1	2	3	4			4	1.9
{té·mses}	1	2		3	4		4	3.8
{qé·msit}	1	1~2	1	3~4	4		4	1.9
{qeqí·t}	1	1~2	1~3	4			4	1.9
{pé·ps}	1	2		3			3	53.8
{ɨiɨté·n}	1			2	3		3	3.8
{yé·ke?}	1			2			2	25.0

Reproduced with permission of the copyright owner. Further reproduction prohibited without permission.

In compound stems, the maximal number of constituent morphemes appears to be two. As in monomorphemic stems the allomorphic variation is in number of segmentals, in length and in stress. Unlike monomorphemic stem allomorphs, some morphemes with consonant-final allomorphs before a morphological word juncture have allomorphs ending in a stressed vowel when they are the first member in a compound. Though there are exceptions, the second member tends to have unstressed allomorphs.

‖hecwelé· miye?c‖ : /hacwalá·miya?c/ 'son'

‖hé?cwel‖ : /há·cwal/ 'boy'

‖miyé?c‖ : /miyá?c/ 'child'

‖cewitéx si·s‖ : /cawitáxsi·s/ 'carrot soup'

‖cewí·tk‖ : /cawi·tx/ 'wild carrot'

‖sí·s‖ : /sí·s/ 'broth'

‖'ele télu‖ : /?alatálo/ 'yellowjacket'

‖'é·le‖ : /?á·la/ 'fire'

‖té·lu‖ : /tá·lo/ 'testes'

‖píyéxc 'ini·t‖ : /piyéx̣cini·t/ 'Mt. Idaho' (from its shape)

‖píyexs‖ : /píyex̣s/ 'rawhide strap'

‖'iní·t‖ : /?iní·t/ 'house,' 'tepee'

Reproduced with permission of the copyright owner. Further reproduction prohibited without permission.

510.2 Numeral stems (nuS) : any numeral.

The numeral allomorphy may be summarized:

after	stem	bef.{+}	{ne}	{t}	{we +}	{we nik}	{eʔéle}	{éhem}	{hú·sus}	{eʔéptit}
+	{né·qc}'1'	né·qc	=	ø	né·qc	neqc	nexc	neqc	ø	ø
+	{lep} '2'	ø	ø	lepí	lep	=	=	=	=	1
+	{mité·}'3'	ø	ø	mité·	mité	*	mit	=	=	=
pí·	{lep}2x'2'	ø	ø	lep	=	*	lep	=	=	=
+	{pé·xe}'5'	ø	ø	pé·xe	pé·x	pex	peq	peq	pé·q	peq(1)pe·q(2)
'uy	{né·qc}5+'1'	lé·qc	=	ø	lé·qc	*	leqc	=	=	leqs
'uy	{lep} 5+'2'	ø	ø	né·p	=	nep	=	=	=	n
'uy	{mité·}5+'3'	ø	ø	méte	=	mete	mit	=	=	=
+	{ƙúyc} '9'	ƙúyc	ƙu?ic	ø	ƙu?ic	ƙu?ic	ƙuyc	=	=	ƙuys
+	{pú·tim}'10'	ø	ø	pú·tim	=	pu·tim	putim	pu·tim	pu·tm	pú·t

ø: non occurrence

=: same as left

*: lacunae

(2): before {eʔéptit} followed by {+}

(1): elsewhere before {eʔéptit}

Reproduced with permission of the copyright owner. Further reproduction prohibited without permission.

510.3 Kinship term stems (kS) : any kinship term.

The kinship term stems may be divided into two groups and five subgroups. The relationship of these groups and subgroups and affixal allomorphs may be summarized:

Environments / Stem groups	{ne?}	{'im}	{pe·}	{e?c}	{nim} 1	{nim} 2	{ne} 1	{ne} 2	{e}	{e?}
Group 1a	ne? né?	'i 'i'm 'im	ø	e?c	em	pim im	ep	ne	e	e?
Group 1b			pí pi pé· pe· pé pí·	ø						
Group 2a	'iní 'in 'inm 'iním	'im	ø		*		ep			ø
Group 2b							p~ne			
Group 2c										

Environment 1: + {ne?}/{'im} stem - +

Environment 2: + {pe·} stem - + or + stem {e?c} - +

The membership of the groups above is as follows:

Group 1a: {qelec} 'FaFa,' {'é·1} 'FaMo,' {pîléq} 'MoFa,' {qé·c} 'MoMo.'

Reproduced with permission of the copyright owner. Further reproduction prohibited without permission.

Group 1b: {tú·t} 'Fa,' {ʾí·c} 'Mo,' {méq} 'FaBr,' {cí·c} 'FaSi,' {téq} 'MoBr,' {qé·q} 'MoSi,' {yé·c} 'OBr,' {né·n} 'OSi.'

Group 2a: {ʾécqe} 'YBr(m),' {nípe} 'YBr(f),' {qéni} 'YSi(m),' {ʾéyi} 'YSi(f),' {ʾé·ks} 'Si(f),' {pé·qiy} 'BrCh(m),' {pé·mte} 'BrSo(f),' {pú·y} 'BrDa(f),' {mém} 'SiCh(m),' {ʾí·te} 'SiCh(f),' {miyé?c} 'Ch,' {péhep} 'Da(m),' {peqélis} 'SoCh(m),' {péplex̣} 'DaCh(m),' {píptex̣} 'SoCh(f),' {péqex̣} 'DaCh(f),' {pinú·kin} 'HuBr,' 'BrWi(m),' {cí·ks} 'HuSi,' 'BrWi(f),' {tiwé·ye} 'WiBr,' {ciki·wn} 'WiBr,' {piné·xsin} 'HuFa,' 'SoWi,' {pí·ses} 'WiFa,' {ʾîwé·p} 'Wi.'

Group 2b: {hé·me} 'Hu.'

Group 2c: {ciwé·qu} 'WiMo.'

Semantically, Group 1 includes the forms referring to senior consanguineal kin, while the second group includes the forms referring to junior consanguineal kin and affinal relationships. Group 1a includes four grandparent-grandchild forms.

The stem allomorphy in Group 1 is characterized by a ‖c‖-‖s‖ alternation between first and second person singular possessed forms, the former occurring with

Reproduced with permission of the copyright owner. Further reproduction prohibited without permission.

‖c‖ and the latter with ‖s‖, and by final t-less allomorphs before suffixes with initial n and by p-less allomorphs before suffixes with initial m.

The complete inventory of kinship stem allomorphy is:

Environments:

1: + - +
2: + - {e?}
3: {ne?} - +
4: {ne?} - {nim}/{ne}
5: {'im} -
6: {pe·} - + or + - {e?c} +
7: {pe·} - {ne} or + - {e?c}{ne}
8: {pe·} - {me} or + - {e?c}{me}

Environments:		1	2	3	4	5	6	7	8
{qelélc}	FaFa	Ø	qelélc	=	=	=	=	=	=
{'é·l}	FaMo	Ø	'é·l	'él	'é·l	=	=	=	*
{pîléq}	MoFa	Ø	pîléq	=	=	=	=	=	*
{qé·c}	MoMo	Ø	qé·c	=	=	qé·s	qé·c	=	*
{tú·t}	Fa	Ø	tú·t	=	=	=	st	sí	sit
{'í·c}	Mo	Ø	'í·c	=	=	'í·s	ke	ké·	=
{méq}	FaBr	Ø	méq	=	=	=	mq	méq	=
{cí·c}	FaSi	Ø	cí·c	=	=	sí·s	sis	sí·s	=
{téq}	MoBr	Ø	téq	=	=	=	tq	téq	*
{qé·q}	MoSi	Ø	qé·q	=	=	=	qeq	qé·q	=
{yé·c}	OBr	Ø	yé·c	=	=	yé·s	yep	yé·p	yé·
{né·n}	OSi	Ø	né·n	nic	=	nis	het	hé·	hét

Reproduced with permission of the copyright owner. Further reproduction prohibited without permission.

Reproduced with permission of the copyright owner. Further reproduction prohibited without permission.

Environments:		1	2	3	4	5	6	7	8
{'ecqe}	YBr(m)	'écqe	'ésqep	=	=	'sqep	'ésqep	'esqép	'esqé
{nípe}	YBr(f)	nípe	pekt	pek	pé·kt	pekí	pé·kt	pekí	pekít
{qéni}	YSi(m)	qéni	qenis	=	qénis	qení·s	qénis	qenis	qení·s
{'éyi}	YSi(f)	'éyi	'ecip	=	=	'cí·p	'écip	'ecí·p	'ecí·
{'é·ks}	Si(f)	'e·ks	=	=	=	=	=	=	=
{pé·qiy}	BrCh(m)	pé·qiy	peqiyex̣	=	peqíyex̣	peqiyé·x̣	peqí·yex̣	peqiyé·x̣	=
{pé·mte}	BrSo(f)	pé·mte	pemtin	=	pé·mtin	=	=	pé·mte	pé·mtin
{pú·y}	BrDa(f)	pú·y	pu·t	pu·	pú·t	pú·	pú·t	pú·t	=
{mém}	SiCh(m)	mém	pitx̣pe	=	pitéx̣p	=	=	pitx̣pé·	=
{'í·te}	SiCh(f)	'í·tx	=	=	=	=	=	=	=
{péhep}	Da(m)	péhep	pehep	*	*	*	péhep	*	pehé

Environments 1: + - +
2: + {ne?} - +
3: + {ne?} - {ne} +
4: + {'im} - +
5. + {'im} - {ne} +
6. + {pe·} - +
7: + {pe·} - {ne} +
8: + {pe·} - {me} +

Reproduced with permission of the copyright owner. Further reproduction prohibited without permission.

Environments:		1	2	3	4	5	6	7	8
{peqélis}	SoCh(m)	∅	peqelis	=	peqélis	peqlís	peqélis	peqlís	=
{péplex̣}	DaCh(m)	∅	peplex̣	=	péplex̣	peplέx̣	péplex̣	peplέx̣	*
{píptex̣}	SoCh(f)	∅	piptex̣	=	píptex̣	pipté·x̣	píptex̣	pipté·x̣	=
{péqex̣}	DaCh(f)	∅	pqex̣	=	péqex̣	pqé·x̣	péqex̣	peqé·x̣	*
{pinú·kin}	HuBr	∅	pnukin	pnukun	pnú·kin	pnukún	pinú·kin	pinukún	=
{cí·ks}	HuSi	∅	ciks	=	cí·ks	=	=	*	*
{piné·xsin}	HuFa	∅	pnexsin	=	pné·xsin	=	piné·xsin	*	*
{ciʼkí·wn}	WiBr	∅	ciʼkiwn	=	ciʼkí·wn	=	=	*	*
{tiwé·ye}	WiBr	∅	tiweye	=	tiwé·ye	=	=	*	tiweyé·
{píses}	WiFa	∅	pses	=	píses	=	=	pisé·s	*
{ʼîwé·p}	Wi	∅	ʼîwé·p	=	=	=	*	*	*
{hé·me}	Hu	∅	hé·me	hé·m	=	=	hé·me	=	*
{ciwé·qu}	WiMo	∅	ciweq, {ciweq ~ ciwequ}		ciwé·q	=	ciwé·qu	*	*

510.4 Personal pronoun stems (ppS) : any personal pronouns.

The stem allomorphy of the personal pronouns is:

before:	+	nim	ne	ḱe	ʾeq	weˑtk	ciwéˑtq	ník	hiʾˑn	me
{ʾíˑn}	1sg	ʾíˑn	=	=	=	=	ʾin	ʾin	=	*	∅
{ʾíˑm}	2sg	ʾíˑm	ʾim	ʾime	ʾíˑm	∅	*	ʾim	=	*	ʾim
{ʾipí}	3sg	ʾipí	ip	=	ʾipín	∅	*	ʾip	ʾipin	ʾipn	∅
{núˑn}	1pl	núˑn	=	=	=	=	*	{nun ~ nuˑ	nun	*	∅

{ʾíˑm} with {me}, a plural suffix, indicates either second or third person; and second person singular without {me}.

{núˑn ciwéˑtq} has two forms, /nonciwáˑtx̣/ and /noˑciwáˑtx̣/, the latter being an "older" form (cf. p. xxii).

Reproduced with permission of the copyright owner. Further reproduction prohibited without permission.

510.5 Demonstrative stems (dS) : any demonstrative.

There are two demonstrative stem morphemes: {kí•} 'this,' and {ku} 'that.' The allomorphs are:

Environments:	1	2	3	4	5
{kí•} 'this'	kí•	kín	kin	kin	kí•
{ku} 'that'	ø	kun	kún	kun	kun

Environments 1: before {+}, {kek}

2: before {pe +}, {ike}, {ki}, {kiʼnik}, {ne}, {nim}, {wecet}

3: before {ʼéyn}

4: before {pe mé}

5: before {me}

Examples are:

		{kí•}	{ku}
Environment 1	before {+}	‖kí•‖	
	before {kek}	‖kí• kek‖	
Environment 2	before {pe +}	‖kín e‖	‖kun é‖
	before {ike}	‖kín ike‖	‖kun iké‖
	before {ki}	‖kín ki‖	‖kun kí‖
	before {kíʼnik}	‖kín ik‖	‖kun í•k‖

Reproduced with permission of the copyright owner. Further reproduction prohibited without permission.

		{kí·}	{ku}
	before {ne}	‖kín ye‖	‖kun yé‖
	before {nim}	‖kín m‖	‖kun ím‖
	before {wecet}	‖kín wecet‖	‖kun wecé·n‖
Environment 3:	before {'éyn}	‖kín 'yeyn‖	‖kún 'yeyn‖
Environment 4:	before {pe mé}	‖kin é· me‖	‖kun e mé‖
Environment 5:	before {me}	‖kí· me‖	‖kun mé‖

{yuq} 'that' is semantically similar to {ku} 'that.' However, the allomorph ‖ne‖ of {ne}, instead of ‖ye‖ or ‖yé‖, occurs with yuq, which may be taken as a general noun. Because yuq occurs in the first environment, where ku does not, yuq frequently is found as a suppletive element.

Reproduced with permission of the copyright owner. Further reproduction prohibited without permission.

510.6 Adjective stems (aS) : any adjective.

Adjective stem allomorphy may be treated more systematically after a larger corpus is examined; affixes occur with adjectives much less frequently than with the other subclasses of substantives. However, three trends may be observed, (1) stems with stress on the last syllable in an allomorph which occurs after a {+} tend to have an allomorph with stress on the first syllable after an unstressed prefix, (2) an unstressed allomorph occurs after {ʔeteyé·} or before {ník}, (3) allomorphs ending in V́ʔC before a {+} tend to have an allomorph ending in VʔV́C before a suffix.

Example of (1):

‖cicqíʔc‖ : /cicqíʔc/ 'generous'

‖r cícqiʔc‖ : /cicícqiʔc/ 'generous' (distributive)

Example of (2):

‖téʔc‖ : /táʔc/ 'good'

‖ʔeteyé· teʔc‖ : /ʔatayá·taʔc/ 'too good'

‖teʔc ník‖ : /taʔsníx/ 'very good'

Examples of (3):

‖teʔéc wi t‖ : /taʔácwit/ 'goodness'

‖qepsíʔs‖ : /qepsíʔs/ 'bad'

‖qepsiʔís wi t‖ : /qepsiʔíswit/ 'badness'

Reproduced with permission of the copyright owner. Further reproduction prohibited without permission.

520. Substantive themes (sT).

Each of the above stem classes is defined by its occurrence in special thematic constructions. These constructions include classes of substantive affixes, which are shown below, together with their distributions among the various stem-classes.

521. Thematic affix classes.

Prefixes:

class	subclass	number of members	occurs with					
			nS	nuS	kS	ppS	dS	aS
< r >		1	x					x
< peH >		1	x	x				
< ne? >		3	x		x			
< 'e·t >	'e·t	1	x					x
	'eteyé·	1	x		x			x
	'ic	9	x					
	wiweqi	1	x		x			
	'úy·	1	x	x				
	'uy	2		x				
	siléw	1						x

Reproduced with permission of the copyright owner. Further reproduction prohibited without permission.

Suffixes:

class	subclass	number of members	occurs with					
			nS	nuS	kS	ppS	dS	aS
< ʾé·1 >		31	x					
< eʔéce >		3		x				
< eʔéptit >		1		x				
< hú·sus >		1		x				
< we >	we	1	x	x				x
	t	1		x				
< eʔc >		2			x			
< ʾeq >		5				x		
< wey1 >		1					x	
< ník >	ník	1	x	x	x	x	x	x
	cim	1	x				x	
	tí·te	1				x	x	
< nú·t >		1	x					
< nim >		1				x	x	
< me >		1	x		x	x	x	
< ʾéyn >	ʾéyn	1	x				x	
	hí·n	1	x		x	x		
	mé	1	x				x	
	pe	1	x			x	x	

Reproduced with permission of the copyright owner. Further reproduction prohibited without permission.

521.1 Thematic Prefix Classes.

< r > The single member of this class is {r} (distributive), e.g.,

‖hé·cwel‖ : /há·cwal/ 'son'

‖r hé·cwel‖ : /hahácwal/ 'son' (distributive)

‖wepcú·k‖ : /wepcú·x/ 'intelligent'

‖r_i wé·pcuk‖ : /wiwé·pcux/ 'intelligent' (distributive)

< peH > The single member of this class is {peH} 'each' (with general nouns and kinship terms), 'in groups of ...' (with numerals), e.g.,

‖hé·pey‖ : /hé·pey/ 'middle'

‖peH hé·pey‖ : /pehé·pey/ 'each of the middle ones' (e.g., any toe other than big and little toes)

‖peH lepít‖ : /pellepít/ 'in twos'

< ne? > The three members of this class are {ne?} (first person singular possessive), {'im} (second person singular possessive), {pe·} (non-possession). An example with {ne?} is:

‖ne? tú·t‖ : /na?tó·t/ 'my father'

Reproduced with permission of the copyright owner. Further reproduction prohibited without permission.

< ʾé·t > This class has 16 members, generally attributive in meaning. An example is: {ʾé·t} 'big,' 'very.'

‖tḗʔc‖ : /táʔc/ 'good'

‖ʾe·t- tḗʔc‖ : /ʔe·ttáʔc/ 'very good'

The others are:

{ʾeteyé·} 'distant,' 'deceased,' 'unbelievably'

{ʾic} 'direction of'

{ʾilé·} 'of fire'

{ke·} 'connected with biting'

{kun} 'once removed'

{pex} 'each'

{telí·} 'short'

{weʔ} 'with hand'

{wiyé·} 'in camping,' 'in moving'

{wiweqi} 'old'

{ʾúy} 'all,' 'both'

{ʾuy} 'five'

{pi·} 'twice,' 'mutually'

{silέw} 'seemingly'

{R} (diminutive)

Reproduced with permission of the copyright owner. Further reproduction prohibited without permission.

521.2 Thematic Suffix classes.

< ʼé·1 > This class has 27 members. An example is

{ʼé·1} 'season of ...'

‖q̓úyx̣c‖ : /q̓óyx̣c/ 'small reddish salmon'

‖q̓uyx̣c ʼé·1‖ : /q̓oyx̣ć·1/ 'season of small reddish salmon'

The others are:

{ʼes} 'cure for ...'

{ʔm} 'season of ...'

{ʔwé·t} 'person who uses'

{eʔél} 'place where ... is'

{eʔé·t} 'female ...'

{en} (meaning uncertain)

{e·s} 'site of ...'

{ete·s} 'place where ... lives'

{hí·c} 'place where ... is' (of plants)

{ht} 'beginning of ...'

{í} 'possessor of ...'

{íʔles} 'one that lives in ...'(?)

{ínme} 'a creature from ...'

{mep} 'place of ...'

{nikey} 'all of ...'

{níme} 'place where ... is'

{nimu·} 'people who eat ...'

Reproduced with permission of the copyright owner. Further reproduction prohibited without permission.

{nume} (place name formant)

{peíu·} 'person connected with ...'

{pu·} 'residents at ...,' 'band or tribe of ...'

{qen} 'young of ...,' 'small'

{sí?wey} 'bush of ...'

{twe·} 'friend in ...,' '-mate,' 'person having ... in common'

{wé·ku?s} 'a thing like ...'

{wite·s} 'place where ... was,' 'person that used to be ...'

{yé·ye} 'the family of ...'

< e?éce > The three members of this class are {e?éce} 'group,' {e?éle} 'pair,' {éhem} 'times.'

An example (with {éhem}) is:

‖lep éhem‖ : /lepéhem/ 'twice'

< e?éptit > The single member of this class is {e?éptit} 'ten times,' e.g.,

‖'uy mit e?éptit‖ : /?oymita?áptit/ 'eighty'

< hú·sus > The single member of this class is {hú·sus} 'hundred times,' e.g.,

‖'uy mit hú·sus‖ : /?oymitó·sos/ 'eight hundred'

Reproduced with permission of the copyright owner. Further reproduction prohibited without permission.

< we > The two members of this class are {we} (personal classifier), {t} (neutral classifier), e.g.,

‖'uy né·p we‖ : /ʔuyné·pwe/ 'seven' (people)

‖'uy né·p t‖ : /ʔuyné·pt/ 'seven'

< eʔc > The two members of this class are {eʔc} (non-possession), and {eyu·} '... and others,' e.g.,

‖qeléc eʔc‖ : /qaláca ʔc/ 'paternal grandfather'

‖neʔ tú·t eyu·‖ : /naʔtó·tayo·/ 'my father and others'

< 'eq > This class has 5 members. An example is {ciwé·tq} 'alone.'

‖'í·n‖ : /ʔí·n/ 'I'

‖'in ciwé·tq‖ : /ʔinciwá·tx̣/ 'I alone'

The others are:

{'eq} (optative suffix)

{ḱe} 'also'

{q̓uʔc} 'first'

{we·tk} 'alone'

Reproduced with permission of the copyright owner. Further reproduction prohibited without permission.

< wey1 > The single member of this class is {wey1} 'so much,' e.g.,

‖ki wéy1‖ : /kiwáy1/ 'this long,' 'this much'

< ník > The three members of this class are {ník} (intensifier), {cim} 'only,' {tí·te} 'same.' An example with {ník} is:

‖té?c‖ : /tá?c/ 'good'

‖te?c ník‖ : /ta?sníx/ 'very good'

‖'í·n‖ : /?á·n/ 'I'

‖'in ník‖ : /?innís/ 'I myself'

‖kuné‖ : /koná/ 'there'

‖kuney ník‖ : /konayníx/ 'at that very place'

< nú·t > The single member of this class is {nú·t} 'without,' e.g.,

‖'é·tim‖ : /?á·tim/ 'arm'

‖'etim nú·t‖ : /?atimnó·t/ 'armless,'

'General Oliver O. Howard'

< nim > The single member of this class is {nim} (possessive-nominative), e.g.,

‖síḱem‖ : /síḱem/ 'horse'

‖siḱé·m nim‖ : /siḱé·mnim/ 'horse' (poss-nom)

Reproduced with permission of the copyright owner. Further reproduction prohibited without permission.

< ʾéyn > The four members of this class are {ʾéyn} '(thing) for ...,' {híʾn} '(an object) with ...,' {mé} '(people) from ...,' {pe} 'at ...,' 'place of ....'

‖ciq̓é·m qel‖ : /ciq̓á·mqal/ 'dog'

‖ciq̓é·m qel ʾéyn‖ : /ciq̓a·mqal̓áyn/ 'for dog,' 'dog sled'

‖hé·ses‖ : /há·sas/ 'nit'

‖hesé·s hiʾn‖ : /hasá·siʔn/ 'nitty,' 'Shoshoni'

‖ʾelpéwewi‖ : /ʔalpáwawi/ 'Alpowa Creek, Wash.'

‖ʾelpewewi mé‖ : /ʔalpawawimá/ 'people from Alpowa'

‖túhun‖ : /tóhon/ 'leggings'

‖tuhún pe‖ : /tohónpa/ 'in leggings'

Reproduced with permission of the copyright owner. Further reproduction prohibited without permission.

522. Thematic constructions.

The varying internal structures of the substantive theme (sT) are described in the following sections. The elements surrounding the stem class markers are references to the preceding chart of affixes.

sT:	ne?	r	peH	'e·t	nS	'é·l	'éyn	me	we	nik
1.	x				x	x				
2.		x			x		x			x
3.		x	x		x					
4.			x		x		x			
5.				x	x					
6.					x	x	x		x	
7.					x			x		
8.					x				x	
9.					x					

Examples:

1. {ne? 'îlú·t twe·} : ‖'in 'îlú·t we·‖ : /?inlú·twe·/ 'my half-brother' (a woman speaking) ({ne?} 'my,' {'îlú·t} 'belly,' {twe·} 'a person having ... in common'
2. {r 'inwim mé cim} : ‖r 'inwí·m e cim‖ : /he?inwí·mcim/ 'only yearlings' ({r} distributive, {'inwim} 'year,' {mé} '(a being) from,' {cim} 'only')
3. {r peH néqe} : ‖r_i peH néqe‖ : /pepennéqe/ 'half-breeds' ({r} distributive, {peH} 'each,' {néqe} 'half')

Reproduced with permission of the copyright owner. Further reproduction prohibited without permission.

4. {peH ciḱé·t pe} : ‖peH cíḱet pe‖ : /pecíḱetpe/ 'every night,' 'night after night' ({ciḱé·t} 'night,' {pe} 'place or time of ...')
5. {ʼeteyé· kú·s} : ‖ʼeteyé· ku·s‖ : /ʔeteyé·ku·s/ 'ocean' ({ʼeteyé·} 'distant,' 'deceased,' {kú·s} 'water')
6. {ʼéys níme pe we} : ‖ʼeys nimé pe we‖ : /ʔaysnimá·po·/ 'Catholics' ({ʼéys} 'parsnip sp.,' {níme} 'a place where ... is,' {pe} 'place of ...,' {we} personal classifier)
7. {léwtiwe· me} : ‖léwtiwe·me‖ : /láwtiwa·ma/ 'friends' ({léwtiwe·} 'friend,' {me} plural suffix)
8. {leʔém we} : ‖leʔém we‖ : /la.ámwa/ 'all the people' ({leʔém} 'all,' {we} personal classifier)
9. {léwtiwe·} : ‖léwtiwe·‖ : /láwtiwa·/ 'friend'

ST: nS nú·t

Example:

{ʼé·tim nú·t} : ‖ʼetim nú·t‖ : /ʔatimnó·t/ 'armless,' 'General O. O. Howard' ({ʼé·tim} 'arm,' {nú·t} 'without')

Unlike substantive themes in which a general noun stem is a constituent, the substantive themes having a numeral stem as the constituent occur with at least one obligatory suffix.

Reproduced with permission of the copyright owner. Further reproduction prohibited without permission.

sT:	peH	ʾe·t	nuS	e?éptit	hú·sus	we	e?éce	ník
1.	x	x	x				x	
2.			x	x	x			
3.			x			x	x	
4.			x			x		x
5.			x	x			x	
6.			x		x	x		
7.		x	x			x		x
8.			x			x		

Examples:

1. {peH ʾuy né·qc éhem} : ‖peH ʾuy leqc éhem‖ : /pa?oylaqcáham/ 'six times each' ({peH} 'each,' {ʾuy} 'five,' {né·qc} 'one,' {éhem} 'times')
2. {lep e?éptit hú·sus} : ‖l e?eptit hú·sus‖ : /le?eptitú·sus/ 'two thousand' ({lep} 'two,' {e?éptit} 'ten times,' {hú·sus} 'hundred times')
3. {pú·tim t e?éle} : ‖pu·tim t e?éle‖ : /pu·timte?éle/ 'ten pairs' ({pú·tim} 'ten,' {t} neutral classifier, {e?éle} 'pair')
4. {pé·xe we ník} : ‖pex lu· ník‖ : /paxlo·níx/ 'only five people' ({pé·xe} 'five,' {we} personal classifier, {ník} intensifier)
5. {pé·xe e?éptit éhem} : ‖peq eptit éhem‖ : /paqaptitáham/ 'fifty times'

Reproduced with permission of the copyright owner. Further reproduction prohibited without permission.

6. {lep hú·sus we} : ‖lep hú·sus we‖ : /lepú·suswe/ 'two hundred people' ({lep} 'two,' {hú·sus} 'hundred times,' {we} personal classifier)
7. {ʾuy lep we ník} : ‖ʾuy nep we ník‖ : /ʔuynepwenix/ 'only seven people' ({ʾuy} 'five,' {lep} 'two,' {we} personal classifier, {ník} intensifier)
8. {lep t} : ‖lepí ṭ‖ : /lepít/ 'two' ({t} neutral classifier)

Either the < ne? > class, or the < e?c > class is required as a constituent with a kinship stem (kS).

sT:	ʾe·t	ne?	kS	e?c	me	nim	ʾéyn	ník
1.	x	x	x					
2.		x	x			x	x	
3.		x	x			x		x
4.			x	x			x	
5.			x	x	x			
6.		x	x					
7.			x	x				

Examples:

1. {pi· pe· ʾé·ks} : ‖pí· pe ʾeks‖ : /pí·pe?eks/ 'cowives,' 'rivals' ({pi·} reciprocal prefix, {pe·} non-possession, {ʾé·ks} 'sister')

Reproduced with permission of the copyright owner. Further reproduction prohibited without permission.

2. {ne? ʾé·1 nim ʾéyn} : ‖ne? ʾé·1 em -ʾeyn‖ : /ne?é·1emayn/ 'article for my paternal grandmother' ({ne?} 'my,' {ʾé·1} 'paternal grandmother,' {nim} possessive-nominative, {ʾéyn} '(thing) for ...')
3. {ne? ʾé·1 nim cim} : ‖ne? ʾé·1 em cim‖ : /ne?é·1emcim/ 'only my paternal grandmother' ({cim} 'only')
4. {ʾé·1 e?c ʾéyn} : ‖ʾé·1 e?c -ʾeyn‖ : /?é·1e?cayn/ 'article for a paternal grandmother' ({e?c} non-possession)
5. {qeléc e?c me} : ‖qeléc e?c me‖ : /qaláca?cma/ 'paternal grandfathers' ({qeléc} 'paternal grandfather,' {me} plural suffix)
6. {ne? qeléc} : ‖ne? qeléc‖ : /na?qalác/ 'my paternal grandfather'
7. {qeléc e?c} : ‖qeléc e?c‖ : /qaláca?c/ 'paternal grandfather'

sT:	ppS	me	nim	ʾeq	ník	ʾéyn
1.	x	x	x		x	
2.	x	x	x	x		
3.	x		x		x	x
4.	x					x
5.	x				x	
6.	x			x		
7.	x	x				
8.	x					

Reproduced with permission of the copyright owner. Further reproduction prohibited without permission.

Examples:

1. {ʾíːm me nim nik} : ‖ʾim e m nik‖ : /ʔimemnix/
   'your (pl.) very own,' 'their very own' ({ʾíːm} 'you (sg.),' {me} plural suffix, {nim} possessive-nominative suffix, {nik} intensifier)
2. {ʾíːm me nim ḱe} : ‖ʾim éː m ḱe‖ : /ʔiméːmḱe/
   'you (pl.) also,' 'they also' ({ḱe} 'also')
3. {ʾipí nim nik pe} : ‖ʾip nim nix pe‖ : /ʔipnimnixpe/
   'his own place' ({ʾipí} 'he, she, it,' {pe} 'place of ...')
4. {ʾíːm pe} : ‖ʾim pé‖ : /ʔimpé/ 'your (sg.) place'
5. {ʾíːm nik} : ‖ʾim nik‖ : /ʔimnix/ 'you (sg.) yourself'
6. {ʾíːm ḱe} : ‖ʾíːm ḱe‖ : /ʔíːmḱe/ 'you (sg.) also'
7. {ʾíːm me} : ‖ʾim é‖ : /ʔimé/ 'you (pl.),' 'they'
8. {ʾíːm} : ‖ʾíːm‖ : /ʔíːm/ 'you (sg.)'

sT:	dS	weyl	me	nim	ʾéyn	nik
1.	x		x	x		x
2.	x				x	x
3.	x		x		x	
4.	x				x	
5.	x		x			
6.	x	x				
7.	x					

Reproduced with permission of the copyright owner. Further reproduction prohibited without permission.

Examples:

1. {ku me nim tí·te} : ‖kun me m tí·te‖ : /konmamtí·ta/ 'the same those' ({ku} 'that,' {tí·te} 'same')
2. {ku pe ník} : ‖kun ey ník‖ : /konaynix/ 'that very place'
3. {ku me ʼéyn} : ‖kun me ʼyéyn‖ : /konmaʔyáyn/ 'an article for those'
4. {ku pe} : ‖kun é‖ : /koná/ 'that place'
5. {ku me} : ‖kun mé‖ : /konmá/ 'those'
6. {kí· weyl} : ‖ki wéyl‖ : /kiwáyl/ 'this long'
7. {kí·} : ‖kí·‖ : /kí·/ 'this'

sT:	r	ʼe·t	aS	we	ník
1.	x		x		
2.		x	x		
3.			x		x
4.			x	x	
5.			x		

Examples:

1. {r néxsep} : ‖r_i néxsep‖ : /ninéxsep/ 'different' (distributive) ({r} distributive, {néxsep} 'different')
2. {ʼeteyé· téʔc} : ‖ʼeteyé· téʔc‖ : /ʔatayá·taʔc/ 'unbelievably good' ({ʼeteyé·} 'unbelievably,' {téʔc} 'good')

Reproduced with permission of the copyright owner. Further reproduction prohibited without permission.

3. {nex̣sep ník} : ‖nex̣sep ník‖ : /nex̣sepníx/ 'very different'
4. {'il̓éx̣ni we} : ‖'il̓x̣ní· we‖ : /ʔil̓x̣ní·we/ 'many (people)' ({'il̓éx̣ni} 'many,' {we} personal classifier)
5. {t̓é·ʔc} : ‖t̓é·ʔc‖ : /tá·ʔc/ 'good'

523. Deverbative themes.

In addition to the preceding there are substantive themes which include verb stems (vS) as a constituent.

523.1 Deverbative themes in which affixes for substantive themes occur as optional constituents:

sT:	vS	'é·1
1.	x	x
2.	x	

Examples:

1. {p̓éy nime} : ‖p̓éy nime‖ : /páynima/ (place name) (literally 'place of arrival') ({p̓éy} 'come,' {nime} a place name formant, a member of < 'é·1 > class)
2. {l̓éwye·l̓e} : ‖l̓éwye·l̓e‖ : /láwyala/ 'fishing' ({l̓éwye·l̓e} 'fish (vb.)')

Reproduced with permission of the copyright owner. Further reproduction prohibited without permission.

523.2 Deverbative themes in which special suffixes for verb derivation occur as constituents. This special suffix class will be called < ʔé·t > class. The 21 members of this class and thier allomorphs are as follows:

{ʔé·t} (agentive 1) indicates the performer of an action. There are four morphemes (agentives 1-4) with similar semantic content, the last two are extremely limited in occurrence. {ʔé·t} : ‖ne·t‖ or ‖né·t‖ after a c-class verb theme (cf. 620 for c- and s-class distinction); ‖yeʔé·t‖ after an s-class theme ending in ‖i‖; ‖ʔé·t‖ or ‖ʔét‖ elsewhere.

‖ne·t‖:

{pîʔím ʔé·t} : /piʔímne·t/ 'young person'
({pîʔím} 'grow' c-class)

‖né·t‖:

{tɛmtɛ́·y ʔé·t} : /tamtayná·t/ 'minister'
({tɛmtɛ́·y} 'preach,' 'gossip' c-class)

‖yeʔé·t‖:

{sepi·newi ʔé·t} : /sepi·newiyeʔé·t/ 'surveyer'
({sepí·newi} 'measure' s-class)

‖ʔé·t‖:

{tûk^{w}e lú· ʔé·t} : /tukelu·ʔé·t/ 'diver'
({tûk^{w}} 'dive'; {lú·} 'move under water' s-class)

Reproduced with permission of the copyright owner. Further reproduction prohibited without permission.

‖ʔét‖:

{wepeyete ʔé·t} : /wapayataʔát/ 'helper,' 'assistant' ({wepeyete} 'help' s-class)

{eʔwé·t} (agentive 2): ‖neʔwé·t‖ after a c-class theme; ‖yeʔwé·t‖ after an s-class theme ending in a vowel other than ‖e‖; ‖ʔwé·t‖ after an s-class theme ending in ‖e‖; ‖eʔwé·t‖ elsewhere.

‖neʔwé·t‖:

{sepé· hité·me eʔwé·t} : /sepehitemeneʔwé·t/ 'teacher' ({sepé·} causative 620; {hité·me} 'read' c-class, lit. 'one who makes one read')

‖yeʔwé·t‖:

{tûk^{w} lú· eʔwé·t} : /tukelu·yeʔwé·t/ 'diver'

‖ʔwé·t‖:

{wepeyete eʔwé·t} : /wapayataʔwá·t/ 'helper,' 'assistant'

‖eʔwé·t‖:

{hipí eʔwé·t} : /hipeʔwé·t/ 'eater' ({hipí} 'eat' s-class)

{un} (agentive 3) is found in the following two examples, which occur after s-class themes.

{ʼimé·c̓inp un} : /ʔimé·c̓inpun/ 'prophet' ({ʼimé·c̓inp} 'prophesy' s-class)

Reproduced with permission of the copyright owner. Further reproduction prohibited without permission.

{kú· e·yik un} : /kiké·yikun/ 'perennial traveler' ({kú·} 'go' s-class; {e·yik} repetitive 620 s-class)

{lu} (agentive 4) is found in the following single example after a c-class theme.

{ć́í·q lu} : /ć́í·x̣lu/ 'talking squirrel' ({ć́í·q} 'talk' c-class)

{e?í} (inanimate agentive): ‖e?í‖ before {+}; ‖e?í·‖ elsewhere. There are no examples of {e?í} after a c-class theme.

‖e?í‖:

{we· ke?éyk e?í} : /we·ke?yke?í/ 'airplane' ({we·} 'fly'; {ke?éyk} 'go' s-class)

‖e?í·‖:

{'ipné· wîlé· ke?éyk e?í ki} : /?ipnewleke?yke?í·ki/ 'by automobile' ({'ipné·} third person singular reflexive prefix, < pí· > class 620; {wîlé·} 'run' 610.1; {ki} 'by' of < k > class 533)

{e?s} 'an object for ... ing': ‖n̓es‖, ‖l̓ec‖ or ‖s‖ after a c-class theme; ‖e?s‖ after a consonant-final s-class theme; ‖t̓es‖ elsewhere.

Reproduced with permission of the copyright owner. Further reproduction prohibited without permission.

‖ṅes‖:

{hité·me e?s} : /hité·meṅes/ 'book'

({hité·me} 'read' c-class)

‖i̇ec‖:

{kiwkiwí e?s} : /kiwkiwíi̇ec/ 'drum'

({kiwkiwí} 'beat' c-class)

‖s‖:

{tí·pse? s} : /tí·psa?s/ 'scraper' ({tí·pse?}

'scrape' c-class)

‖e?s‖:

{'îse ḱi̲w k e?s} : /?isaḱíwka?s/ 'saw'

({'îse} 'with a cutting instrument';

{ḱi̲w} 'cut'; {k} meaning uncertain, < e̲tk >

class 620; s-class)

‖ṫes‖:

{'ipé·ṫe e?s} : /?ipé·ṫeṫes/ 'scraper/

({'ipé·ṫe} 'scrape' s-class)

{ú?s} 'an object for ...ing': ‖-nú?s‖ after a c-class theme; ‖u?ús‖ after an s-class verb theme ending in a single consonant and not before a {+}; ‖ú?s‖ elsewhere after a consonant-final s-class theme; ‖-ṫu?s‖ elsewhere.

‖-nú?s‖:

{'îye léhne ú?s} : /?iyehnenó?s/ 'pole' (for

Reproduced with permission of the copyright owner. Further reproduction prohibited without permission.

a canoe) ({ʾîye} 'afloat'; {léhne} 'down' c-class)

‖u̲ʔú̲s‖:

{wislíp ú̲ʔs ne} : /wislipoʔósna/ 'snow-shovel (object case)' ({wislíp} 'shovel' s-class; {ne} objective 532)

‖ú̲ʔs‖:

{wislíp ú̲ʔs} : /wislipóʔs/ 'snow-shovel'

‖-t́ú̲ʔs‖:

{cuḱé·ymi ú̲ʔs} : /cuḱeymit́óʔs/ 'bone instrument for scraping the inner pine bark used for food' ({cuḱé·ymi} 'get bark' s-class)

{nwe·s} 'place of ...ing': ‖niwe·s‖ after a c-class consonant-final theme; ‖inwe·s‖ after an s-class consonant-final theme; ‖nwe·s‖ elsewhere.

‖niwe·s‖:

{ʾé·ʔys nwe·s} : /ʔé·ʔysniwe·s/ 'heaven,' 'Happy Hunting Ground' ({ʾé·ʔys} 'be happy' c-class)

‖inwe·s‖:

{ʾé̲·lik nwe·s} : /ʔá·likinwa·s/ 'fireplace' ({ʾé̲·lik} 'make fire' s-class)

‖nwe·s‖:

{ʾîte̲mye̲· nwe·s} : /ʔitamyá·nwa·s/ 'store,' 'town' ({ʾîte̲mye̲·} 'sell' s-class)

Reproduced with permission of the copyright owner. Further reproduction prohibited without permission.

{tesi·n} 'place of ...ing' is found in one example.

{wepté· tesi·n} : /wepté·tesi·n/ 'place for feathering arrows' ({wepté·} 'feather arrows' s-class)

{éhe} 'place of ...ing' is found in one example.

{ʼú·yi éhe} : /ʔuyéhe/ 'starting place' ({ʼú·yi} 'begin,' 'start' s-class)

{sí·mey} 'one incapable of ...ing': ‖cí·mey‖ after a c-class theme; ‖sí·mey‖ elsewhere.

‖cí·mey‖:

{lememt sí·mey} : /lamamtcí·may/ 'impatient person' ({lememt} 'be patient' c-class)

‖sí·mey‖:

{ćí·q sí·mey} : /ćiqsí·mey/ 'deaf-mute,' 'quiet person' ({ćí·q} 'talk' s-class)

{eʔyé·ʔy} 'one incapable of ...ing': ‖ʔné·ʔy‖ after a c-class theme; ‖eʔyé·ʔy‖ or ‖eʔyé·y‖ elsewhere.

‖ʔné·ʔy‖:

{siwlé· eʔyé·ʔy} : /siwleʔné·ʔy/ 'one unable to swim' ({siwlé·} 'swim' c-class)

Reproduced with permission of the copyright owner. Further reproduction prohibited without permission.

‖e?yé·?y‖:

{we kéyk e?yé·?y} : /wakayka?yá·?y/ 'unrinsed' (of clothes), 'unsifted' (of sand) ({we} 'with implement'; {kéyk} 'clean' s-class)

‖e?yé·y‖:

{nekí e?yé·?y} : /neke?yé·y/ 'unthinking person' ({nekí} 'think' s-class)

{tpes} 'one who is unwilling to ...' is found in one example.

{mîćí· tpes} : /mićí·tpas/ 'one who does not want to understand,' 'stubborn person' ({mîćí·} 'hear' s-class) cf. /mićisí·may/ 'one who does not understand (a language),' 'deaf-mute'

{tekey} 'object for ...ing' is found in the following two examples.

{wixs ?ú tekey} : /wixc?útekey/ 'buffalo robe to sit on,' 'cushion' ({wixs} 'sit'; {?ú} meaning uncertain, c-class)

{'isé·pe tekey} : /?isá·ptakay/ 'parfleche' ({'isé·pe} 'put in a parfleche' c-class)

Reproduced with permission of the copyright owner. Further reproduction prohibited without permission.

{tp̓es} 'object for ...ing': is found in one example.

{kícuy ʾíte tp̓es} : /kicú·y̓itetp̓es/

'purse' ({k̓ícuy} 'money,' 'metal'; {ʾíte} 'put in' s-class)

{ʾew} 'characterized by ...ing'

{hením ʾew} : /henímew/ 'lazy,man' ({hením} 'not to go' c-class)

{ʾîkú·y tim ʾew} : /ʔikú·ytimew/ 'honest man' ({ʾîkú·y} 'be honest'; {tim} 'speak' s-class)

{i?n} 'one that is ...ed'

after a stressed s-class theme with final ‖i‖ and before {+} .....‖?n‖

after a stressed s-class theme with other finals and before {+} .....‖i?n‖

after a stressed s-class theme elsewhere .....‖i?s‖

after an unstressed vowel-final s-class theme and before {+} .....‖?í·n‖

elsewhere after an s-class theme and before {+} .....‖yí·n‖

after a c-class theme and before {+} .....‖ni?n‖

elsewhere after a c-class theme .....‖ni?s‖

{i?n} is not found after an unstressed s-class theme and not before {+}.

Reproduced with permission of the copyright owner. Further reproduction prohibited without permission.

‖ʔn‖:

{qêqé·wi iʔn} : /qeqé·wiʔn/ 'drunk'
({qêqé·wi} 'drink' s-class)

‖iʔn‖:

{we kéyk iʔn} : /wakáykiʔn/ 'sifted (sand)'
({we} 'with implement'; {kéyk} 'clean' s-class)

‖iʔs‖:

{sepé· pîyúx̣te iʔn ʼéyn} : /cepé·pyux̣tiʔsʔayn/
'for a pie' ({sepé·} causative prefix 620;
{pîyúx̣te} 'place in between' s-class; {ʼéyn}
'for' 534)

‖ʔí·n‖:

{yex̣se iʔn} : /yax̣saʔí·n/ 'poured over'
({yex̣se} 'spill' s-class)

‖yí·n‖:

{he·ní iʔn} : /hanyí·n/ 'made,' 'manufactured'
({he·ní} 'make' s-class)

‖niʔn‖:

{ʼé·tim ḱí·w iʔn} : /ʔa·timḱí·wniʔn/ 'Gen.
O. O. Howard' (< 'arm cut') ({ʼé·tim} 'arm';
{ḱi·w} 'cut' c-class)

‖niʔs‖:

{ʼé·tim ḱí·w iʔn ne} : /ʔa·timḱí·wniʔsna/
'Gen. O. O. Howard (object case)' ({ne}
object case suffix 532)

Reproduced with permission of the copyright owner. Further reproduction prohibited without permission.

{t} '-ing'

after a vowel-final c-class theme and before {+}..‖n‖

elsewhere after a vowel-final c-class theme ..... ∅

after a consonant-final c-class theme .....‖in‖

after an s-class theme .....‖t‖.

Examples:

‖n‖:

{pí· we·p ci?yew t} : /pí·wapci?yawn/ 'war'

({pí·} reciprocal prefix 620; {we·p} 'with hand or paw'; {ci?yew} 'kill' c-class)

∅ :

{pí· we·p ci?yew t pe} : /pí·wapci?yawpa/

'during the war' ({pe} 'at the time of' 534)

‖in‖:

{tûk^{w}e lí·k t} : /tukelí·kin/ 'hunting'

({tûk^{w}e} 'hunt'; {lí·k} 'move,' 'go' c-class)

‖t‖:

{neki t} : /né·kt/ 'thinking,' 'idea'

({neki} 'think' s-class)

{t̓ípec} (desiderative suffix)

after a c-class theme and before {+} .....‖n̓ípec‖

elsewhere after a c-class theme .....‖ni?pé·c‖

after an s-class theme and before {+ }.....‖t̓ípec‖

elsewhere.....‖t̓ipé·c‖

Reproduced with permission of the copyright owner. Further reproduction prohibited without permission.

Examples:

‖ṅípec‖:

{ṫuk ṫípec} : /ṫuxṅípec/ 'one who likes to talk,' 'gossiper' ({ṫuk} 'gossip' c-class)

‖ni?pé·c‖:

{ciklí· ṫípec wi s e} : /ciklí·ni?pé·cwise/ 'I want to go home' ({ciklí·} 'turn' c-class; {wi} 'do' 622.1)

‖ṫípec‖:

{'iné· kú· ṫípec} : /?ineku·ṫípec/ 'one given to drinking' ({'iné·} reflexive prefix 620; {kú·} 'drink (with a reflexive prefix)' s-class)

‖ṫipé·c‖:

{hi ciklí· tuq ṫípec wi s e} : /hickili·toqṫipá·cwisa/ 'he is anxious to return' ({tuq} 'back' s-class)

{ṫic} 'one that does,' 'one that is characterized by ...ing': ‖'ic‖ or ‖'is‖ after a c-class theme; ‖ṫic‖ elsewhere.

‖'ic‖:

{tillé·p ṫic} : /tillá·ṗic/ 'lonesome' ({tillé·p} 'be lonely' c-class)

Reproduced with permission of the copyright owner. Further reproduction prohibited without permission.

‖'is‖:

{seyqí ṫic} : /sayq̓ís/ 'beautiful' ({seyqí} 'be beautiful' c-class)

‖ṫic‖:

{'îlé·twi ṫic} : /ʔilatwí·ṫic/ 'tiresome' ({'îlé·twi} 'be tired' s-class)

{R} 'one that is characterized by ...ing'

{R kéyk} : /kayxkáyx/ 'clean' ({kéyk} 'be clean' s-class)

{R tí·pit} : /ti·pití·pit/ 'smooth' ({tí·pit} 'be smooth')

The second type of deverbative themes may be summarized as follows:

sT: gvT < ʔé·t >.

General verb themes (gvT) are described in 622.1.

Reproduced with permission of the copyright owner. Further reproduction prohibited without permission.

530. Substantive inflection.

The following five classes of suffixes occur as inflectional elements in constituency with substantive themes:

class	subclass	number of members	occurs with					
			nT	nuT	kT	ppT	dT	aT[1]
< nim >		1	x	x	x	x	x	x
< ne >		1	x	x	x	x	x	x
< k >	k	1	x	x	x	x	x	
	kek	1	x				x	
	ki	1	x	x	x	x	x	x
	kiṅik	1	x		x	x	x	
	hí·nek	1	x					
	leykin	2	x		x			
	ike	2					x	
	wecet	1	x		x		x	
< ʼéyn >	ʼéyn	1	x		x	x	x	
	híʼn	1	x		x	x		
	mé	1	x	x			x	
	pe	1	x	x	x	x	x	
< e >		2			x			

[1] nT, nuT, kT, ppT, dT, aT are substantive themes having nS, nuS, kS, ppS, dS, aS as constituents respectively. nT also stands for an sT having a verb stem as a constituent.

Reproduced with permission of the copyright owner. Further reproduction prohibited without permission.

531. < nim >. The single member of this class is {nim} (possessive-nominative) indicating either the possessor of an object or the performer of the action of the verb. {nim}

with general nouns: ‖m‖, ‖im‖, ‖nm‖, ‖nim‖

as ‖m‖ after a thematic suffix, e.g., {ciq̓é·m qel nim} : /ciq̓á·mqalm/ 'dog' (possessive-nominative);

as ‖im‖ elsewhere after ‖n‖, e.g., {qí·wn nim} /qí·wnim/ 'old man' (possessive-nominative);

as ‖nm‖ elsewhere after a vowel, e.g., {píswe nim} : /piswé·nm/ 'stone' (possessive-nominative);

as ‖nim‖ elsewhere, e.g., {lé·qec nim} : /laqá·snim/ 'mouse'

with kinship terms: ‖em‖, ‖im‖, ‖pim‖

as ‖em‖ with the first group (510.3) and with {ne?} 'my,' or {ʾim} 'your (sg.),' e.g., {ne? tú·t nim} : /na?tó·tam/ 'my father' (poss-nom);

as ‖im‖ elsewhere after ‖p‖, e.g., {píyep nim}: /piyé·pim/ 'elder brother' (possessive-nominative);

as ‖pim‖ elsewhere, e.g., {pe· ʾí·c nim} : /piké·pim/ 'mother' (possessive-nominative)

with personal pronouns: ‖ním‖, ‖ím‖, ‖m‖, ‖im‖

as ‖ním‖ after {ʾipí} 'he, she, it,' e.g., {ʾipí nim} : /?ipním/ 'his,' 'he';

as ‖ím‖ after {ʾí·m} 'you (sg.),' e.g.,

Reproduced with permission of the copyright owner. Further reproduction prohibited without permission.

{ʾíˑm nim} : /ʔimím/ 'your (sg.),' 'you (sg.)'

as ‖m‖ after {me} (plural suffix), e.g.,

{ʾíˑm me nim} : /ʔiméˑm/ 'your (pl.),' 'their,' 'you (pl.),' 'they'

as ‖im‖ elsewhere, e.g., {ʾíˑn nim} : /ʔíˑnim/ 'my,' 'I'

with demonstratives: ‖m‖, ‖ím‖

as ‖m‖ after {kíˑ} 'this,' e.g., {kíˑ nim} : /kínm/ 'this' (possessive-nominative);

as ‖ím‖ after {ku} 'that,' e.g., {ku nim} : /koním/ 'that' (possessive-nominative)

with adjectives: ‖nim‖

{ʾicwéˑys nim} : /ʔicweʔíˑsnim/ 'cold' (possessive-nominative)

Occasionally allomorphs of {nim} for general nouns occur with kinship terms, possibly indicating an analogical formation, e.g., {peˑ ʾíˑc nim} : ‖pikéˑnm‖ : /pikéˑnm/ 'mother,' instead of /pikéˑpim/.

A possible indication of the preceding morphophonemic segment as the conditioning factor with general nouns may be in the following freely alternating doublets:

‖céˑqet‖ : /céˑqet/ 'blackberry'

‖ceqéˑt nim‖ $\overset{f}{\sim}$ ‖ceqéˑ nm‖ : /ceqéˑtnim/ $\overset{f}{\sim}$ /ceqéˑnm/ 'blackberry' (possessive-nominative)

‖ʾéˑwit‖ : /ʔáˑwit/ 'widow'

‖ʾewíˑt nim‖ $\overset{f}{\sim}$ ‖ʾewíˑ nm‖ : /ʔawíˑtnim/ $\overset{f}{\sim}$ /ʔawíˑnm/ 'widow' (possessive-nominative)

Reproduced with permission of the copyright owner. Further reproduction prohibited without permission.

532. < ne >. The single member of this class is {ne} (objective) indicating the object of the verbal action.

{ne}

with general nouns: ‖né‖, ‖e‖, ‖ne‖

as ‖né‖ after {kele} 'that much,' e.g., {kele ne} : /kalaná/ 'that much' (object);

as ‖e‖ after ‖l‖ or ‖n‖, e.g., {qí·wn ne} : /qí·wne/ 'old man' (object);

as ‖ne‖ elsewhere, e.g., {cé·qet ne} : /ceqé·ne/ 'raspberry' (object)

with numerals: ‖íne‖, ‖ine‖, ‖ne‖

as ‖íne‖ after {t} (neutral classifier) preceded by {pú·tim} 'ten,' e.g., {pú·tim t ne} : /pu·timtíne/ 'ten' (object);

as ‖ine‖ elsewhere after {t}, e.g., {lep t ne} : /lepítine/ 'two' (object);

as ‖ne‖ elsewhere, e.g., {lep we ne} : /lepú?ne/ 'two (people)' (object) ({we} personal classifier)

with kinship terms: ‖ep‖, ‖ne‖

as ‖ep‖ with group 1 or 2b (510.3) and with {ne?} 'my,' or {'im} 'your (sg.),' e.g., {ne? qelécc ne} : /na?qalácap/ 'my paternal grandfather' (object);

as ‖ne‖ elsewhere, e.g., {qelécc e?c ne} : /qaláca?cna/ 'paternal grandfather' (object)

Reproduced with permission of the copyright owner. Further reproduction prohibited without permission.

with personal pronouns: ‖né‖, ‖e‖, ‖né·n‖, ‖en‖

as ‖né‖ after {ʾipí} 'he, she, it' and before {+}, e.g., {ʾipí ne} : /ʔipné/ 'him, her, it';

as ‖e‖ elsewhere before {+}, e.g., {ʾí·n ne} : /ʔí·ne/ 'me';

as ‖né·n‖ elsewhere after {ʾipí}, e.g., {ʾipí ne ḱe} : /ʔipné·nḱe/ 'him/her/it also';

as ‖en‖ elsewhere, e.g., {ʾí·n ne ḱe} : /ʔí·nenḱe/ 'me too'

with demonstratives: ‖ye‖, ‖yé‖

as ‖ye‖ after {kí·} 'this,' e.g., {kí· ne} : /kínye/ 'this' (object);

as ‖yé‖ after {ku} 'that,' e.g., {ku ne} : /konyá/ 'that' (object)

with adjectives: ‖ene‖

as ‖ene‖ everywhere, e.g., {kúckuc ne} : /kúckucene/ 'small' (object)

533. < k >. The ten members of this class, mostly with locative or instrumental meanings, are as follows: {k} 'to,' 'upto,' 'than,' 'against,'-th'(with numerals).

with numerals: ‖k‖, ‖kipk‖, ‖ípk‖, ‖ipk‖

as ‖k‖ after {ḱúyc} 'nine' or {eʔéptit} 'ten times,' e.g., {ḱúyc k} : /ḱuʔícx/ 'ninth';

Reproduced with permission of the copyright owner. Further reproduction prohibited without permission.

as ‖kipk‖ after {hú·sus} 'hundred times,' e.g., {pú·tim hú·sus k} : /pu·tmú·suskipx/ 'one thousandth' ({pú·tim} 'ten');

as ‖ípk‖ after {né·qc} 'one' or {pé·xe} 'five' followed by {t} (neutral classifier), e.g., {pé·xe t k} : /pa·xatípx/ 'fifth';

as ‖ipk‖ elsewhere, e.g., {lep t k} : /lepítipx/ 'second' ({lep} 'two')

with non-numerals: ‖pk‖, ‖k‖

as ‖pk‖ after a vowel, e.g., {'é·le k} : /ʔá·lapx/ 'against fire' ({'é·le} 'fire');

as ‖k‖ elsewhere, e.g., {mé·xsem k} : /mexsé·mx/ 'to mountain' ({mé·xsem} 'mountain').

{kek} 'in the direction of ...'

as ‖kek‖ everywhere, e.g., {né·we kek} : /newé·kex/ 'toward Lolo Creek' ({né·we} 'Lolo Creek, Idaho').

{ki} 'in the language of ...,' 'at the time of ...,' 'on account of ...,' 'in comparison with ...,' 'about ...' (of a subject matter), 'by means of ...,' 'than'; ‖kí‖ after {ku} 'that'; ‖ki‖ elsewhere, e.g.,

{ku ki} : /konki/ 'with that'

{su·yé· pe we timt ki} : /so·yá·po·tímtki/ 'in English' ({su·yé·} 'the white,' {pe}

Reproduced with permission of the copyright owner. Further reproduction prohibited without permission.

'place of ...,' {we} personal classifier,
{timt} 'language')

{kiṅik} 'from ...': ‖í·k‖ after {ku} 'that'; ‖ik‖ after {kí·} 'this'; ‖pkiṅik‖ after ‖ʔ‖, ‖k‖, ‖q‖ or a vowel; ‖kiṅik‖ elsewhere.

‖í·k‖ :

{ku kiṅik} : /koní·x/ 'from that'

‖ik‖ :

{kí· kiṅik} : /kínix/ 'from this'

‖pkiṅik‖ :

{cemí·tk kiṅik} : /cemitéxpkiṅix/ 'from huckleberry' ({cemí·tk} 'huckleberry')

‖kiṅik‖ :

{neʔ tú·t nim kiṅik} : /naʔtó·tamkiṅix/ 'from my father'

In two instances of place names, ‖kiṅik‖ is found after a vowel:

{weʔlέwe kiṅik} : /waʔlwá·kiṅix/ 'from Wallawa, Washington'

{lemέte kiṅik} : /lamtá·kiṅix/ 'from Whitebird, Idaho'

Reproduced with permission of the copyright owner. Further reproduction prohibited without permission.

With personal pronouns, ‖kiṅik‖ is found after a thematic suffix and ‖kiṅí·k‖ elsewhere, e.g.,

{ʾí·m nim kiṅik} : /ʔimímkiṅix/ 'from you (sg.)'

{ʾí·m kiṅik} : /ʔimkiṅí·x/ 'from you (sg.).'

The last two were given as possible free alternants in a text.

{hí·nek} 'even ...'

{pí·ps hí·nek} : /pipsí·nex/ 'even a bone'

{weswésnu hí·nek} : /waswasnohí·nax/ 'even a chicken' ({weswésnu} 'chicken')

{leykin} 'in the vicinity of ...'

{lé·qe leykin} : /lá·qalaykin/ 'near a pine tree' ({lé·qe} 'pine tree')

{síḱem leykin} : /siḱá·mlaykin/ 'near a horse' ({síḱem} 'horse')

{pípem} 'among ...'

{léwtiwe· pípem} : /lawtiwa·pípam/ 'among friends' ({léwtiwe·} 'friend')

{ike} 'at ... side': ‖ike‖ after {kí·} 'this'; ‖iké‖ after {ku} 'that,' e.g.,

{kí· ike} : /kínike/ 'on this side'

{ku ike} : /koniká/ 'on that side'

Reproduced with permission of the copyright owner. Further reproduction prohibited without permission.

{met} 'at the time of ...'

{kí· met} : /kí·met/ 'at this time'

{wecet} 'because of ...': ‖wecé·n‖ after {ku} 'that'; ‖wecet‖ elsewhere, e.g.,

{ku wecet} : /konwacá·n/ 'therefore'

{'îtú· wecet} : /ʔitú·wecet/ 'why' ({'îtú·} 'what')

534. < 'éyn >. The four members of this class are ambivalent in that they occur either as thematic affixes or inflectional elements.

{'éyn} 'for the sake of ...': ‖'yéyn‖ after {ku} 'that' followed by {me} (plural suffix); ‖'yeyn‖ elsewhere after demonstratives; ‖éyn‖ ~ ‖'éyn‖ after ‖s‖; ‖'éyn‖ ~ ‖'eyn‖ ~ ‖-'eyn‖ elsewhere.

‖'yéyn‖ :

{ku me 'éyn} : /konmaʔyáyn/ 'for those'

‖'yeyn‖ :

{kí· 'éyn} : /kíńyayn/ 'for this'

‖éyn‖ :

{pískis 'éyn} : /piskisáyn/ 'for door'

Reproduced with permission of the copyright owner. Further reproduction prohibited without permission.

‖'éyn‖ :

{ciq̓é·m qel 'éyn} : /ciq̓a·mqaĺáyn/ 'for dog'

‖'eyn‖ :

{tu?úynu 'éyn} : /to?ynó?ayn/ 'for tail'

‖-'eyn‖ :

{'é·l e?c 'éyn} : /?é·le?c̓ayn/ 'for paternal grandmother'

{hí·n} 'with...': ‖hí·n‖ ~ ‖hi·n‖, e.g.,

{pe· tú·t hí·n} : /pistí·n/ 'with father'

{hé·ses hí·n} : /hasá·si?n/ 'nitty'

({hé·ses} 'louse egg')

{mé} 'from ...'

after {ḱú·seyn} 'Montana' or {ku} 'that'	: ‖emé‖
after {té·kin} 'meadow'	: ‖'mé‖
after a theme with final ‖m‖	: ‖e‖ ~ ‖'é‖
elsewhere	: ‖me‖ ~ ‖mé‖

‖emé‖ :

{ḱú·seyn mé} : /ḱuseyńemé/ 'from Montana'

‖'mé‖ :

{té·kin mé} : /tekiń mé/ 'from meadow'

‖e‖ :

{'ínwim mé} : /?inwí·me/ 'from last year'

({'ínwim} 'year')

Reproduced with permission of the copyright owner. Further reproduction prohibited without permission.

‖'é‖ :

{mé·x̣sem mé} : /mex̣séḿé/ 'from mountain'

‖me‖ :

{nipéhe mé} : /nipehéme/ 'from Graves Creek, Idaho'

‖mé‖ :

{'e̲lpé̲we̲wi mé} : /ʔalpawawimá/ 'from Alpowa, Washington'

{pe} 'at,' 'in,' 'at the time of ...'

after {kí·} 'this':	before {+}	: ‖e‖
	before {ník}	: ‖ey‖
after {ku̲} 'that':	before {+}	: ‖é‖
	before {ník}	: ‖ey‖
after {ník} or {'í·m} 'you (sg.)'		: ‖pé‖
elsewhere		: ‖pe‖

‖e‖ :

{kí· pe} : /kíne/ 'here'

‖ey‖ :

{kí· pe ník} : /kineyníx/ 'at this very spot'

{ku̲ pe ník} : /konayníx/ 'at that very spot'

‖é‖ :

{ku̲ pe} : /koná/ 'there'

‖pé‖ :

{né·qc ník pe} : /na·qcnipá/ 'at the place of only one'

Reproduced with permission of the copyright owner. Further reproduction prohibited without permission.

‖pe‖ :

{tú̲hu̲n pe} : /tohónpa/ 'in leggings'

({tú̲hu̲n} 'trousers,' 'leggings')

535. < e >. The two members of this class are:

{e} (junior vocative suffix) occurs with the four kinship terms denoting grandparent-grandchild relationship and indicates that the vocative refers to the younger referent of the reciprocal system.

The four examples are:

{qe̲lé̲c e} : /qaláca/ 'son's child!'(a man speaking)

{pîlé̲q e} : /piláqa/ 'daughter's child!' (a man speaking)

{'é·1 e} : /ʔé·1e/ 'son's child!' (a woman speaking)

{qé̲·c e} : /qá·ca/ 'daughter's child' (a woman speaking)

{e?} (senior vocative suffix) occurs with twelve kinship terms and indicates the senior referent.

{qe̲lé̲c e?} : /qaláca?/ 'paternal grandfather'

{pîlé̲q e?} : /piláqa?/ 'maternal grandfather'

{'é·1 e?} : /ʔé·1e?/ 'paternal grandmother'

Reproduced with permission of the copyright owner. Further reproduction prohibited without permission.

536. The substantive constructions in which the inflectional suffix classes above participate are:

Ss = subject substantive

Ss : sT [nim]

Example: sT < nim >

{'ipí nim}

‖'ip ním‖

/ ?ipním /

he

So = object substantive

So : sT [ne]

Example: sT < ne >

{'ipí ne}

‖'ip né‖

/ ?ipné /

him

Sl = locative substantive

Sl : sT k/'éyn

Examples: sT < k > sT < 'éyn >

{tiwélqe ki} {ku pe}

‖tiwélqe ki‖ ‖kun é‖

/ tiwélqeki / / koná /

on account of the enemy at that place

Reproduced with permission of the copyright owner. Further reproduction prohibited without permission.

At = attributive

At: sT [nim]

Example: sT < nim >

{'ipí nim}

‖'ip ním‖

/ ʔipním /

his

I = interjection

I: sT e

Example: sT < e >

{qe1éc eʔ}

‖qe1éc eʔ‖

/ qaláca? /

paternal grandfather!

Reproduced with permission of the copyright owner. Further reproduction prohibited without permission.

600. VERB

Verb stems are discussed in 610 and verb themes are discussed in 620.

610. Verb stems.

There are two verb stem classes.

610.1 General verb stems (gvS) : one or two general verb root morphemes, or a general verb root morpheme plus a preceding general noun root morpheme.

The two main variables in the allomorphy of monomorphemic verb stems are stress and canonical forms.

The two major types of verb stems, in terms of the first variable noted above, are stressed and unstressed types, the latter with two subtypes.

A stressed verb stem occurs always with a stress, and ends in either a consonant or an unstressed vowel, e.g.,

{têqí·k} 'come down' s-class

‖têqí·k s e‖ : /teqí·kse/ 'I am coming down'

‖têqí·k s e qe‖ : /taqí·ksaqa/ 'I came down'

{tí·we} 'smell bad' c-class

‖tí·we c e‖ : /tí·wece/ 'I smell bad'

‖tí·we c e qe‖ : /tí·wacaqa/ 'I smelled bad'

Reproduced with permission of the copyright owner. Further reproduction prohibited without permission.

Members of the unstressed type are represented by some stressed and some unstressed allomorphs, and may be further divided into two subtypes: {hipí} type and {hení·} type.

{hipí} type is characterized by final stressed ‖í‖ in an allomorph before {s} class marker and {e} singular suffix, and by unstressed allomorphs elsewhere, e.g.,

{hipí} 'eat' s-class

‖hipí s e‖ : /hipíse/ 'I eat'

‖hip s é· qe‖ : /hipsá·qa/ 'I ate'

‖hip ú?‖ : /hipú?/ 'I will eat'

{hekí} 'see' c-class

‖hekí c e‖ : /hekíce/ 'I see'

‖hek c é· qe‖ : /hakcá·qa/ 'I saw'

‖'e hek n ú?‖ : /?e·xnú?/ 'I will see it'

{hení·} type is characterized by final stressed vowel in an allomorph before {s} and {e}, {u?} indicative future suffix, or {u?qe} conditional past suffix, and by unstressed allomorphs elsewhere, e.g.,

{hení·} 'make' s-class

‖hení· s e‖ : /haní·sa/ 'I make'

‖heni s é· qe‖ : /hanisá·qa/ 'I made'

‖hení yu?‖ : /haníyo?/ 'I will make'

Reproduced with permission of the copyright owner. Further reproduction prohibited without permission.

The following shows the suffixal allomorphs determined by the two stem types and subtypes discussed above.

	after stressed stem	after unstressed stem	
		{hipí}	{henî·}
{e} singular (not before {+})	‖e‖	‖é·‖	‖é·‖
{i} plural	‖i‖	‖î·‖	‖î·‖
{u?} indicative future	‖yu?‖ ‖u?‖	‖ú?‖	‖yu?‖ ‖u?‖
{eq} conditional present	‖eq‖	‖'é·q‖	‖'é·q‖
{u?qe} conditional past	‖yu?qe‖ ‖u?qe‖	‖ú?qe‖	‖yu?qe‖ ‖u?qe‖
{te} frequentative present	‖te‖,‖te·‖	‖té·‖	‖té·‖
{qeqe} frequentative recent past with {i}	‖ye?niqe‖ ‖e?niqe‖	‖ye?ní·qe‖	‖ye?ní·qe‖
{qene} frequentative remote past with {i}	‖yenixne‖ ‖enixne‖	‖ení·xne‖	‖ení·xne‖

When certain prefixes occur with an unstressed stem, a stressed allomorph of the prefix ocurs if the prefix can be represented by a stressed allomorph. In such cases the stem allomorph before {s} and {e} is without the final ‖î‖. Furthermore, an unstressed set of suffixal allomorphs occur, e.g.,

‖weqe lpí s e‖ : /waqalpîsa/ 'I hug'

({weqi} 'in arms,' {'înpí} 'seize')

Reproduced with permission of the copyright owner. Further reproduction prohibited without permission.

‖'ipné weqe 1p t‖ : /ʔipnó·qa1pt/ 'to fold arms' ({'ipné·} third person singular reflexive prefix, {t} gerundial suffix; lit. 'to hug himself')

‖pí· weqe 1p s i k‖ : /pí·waqa1psix/ 'we are hugging each other' ({pí·} reciprocal prefix, {i} plural suffix, {k} indicative present)

The canonical alternation may be found stem-initially or stem-finally, the former is found in all types of stems while the latter is found only in {hipí} and {henî·} types.

The stem-initial alternation is as follows: $C_1VC_2C_3$ after {+} and $C_1C_2VC_3$ elsewhere.

‖ciklî·k s e‖ : /ciklî·kse/ 'I return'

‖hi ckilî·k s e‖ : /hickilî·kse/ 'he returns' ({hi} third person subject prefix)

‖titwetî· s e‖ : /titwatî·sa/ 'I tell a story'

‖hi ttiwetî· s e‖ : /hittiwatî·sa/ 'he tells a story'

The stem-final alternation is as follows: $C_1C_2\acute{V}(\cdot)$ before {s} and {e}, and $C_1\acute{V}C_2$ before {t}.

‖we 'înpí s e‖ : /we?npíse/ 'I am singing' ({we} 'with mouth,' {'înpí} 'seize')

Reproduced with permission of the copyright owner. Further reproduction prohibited without permission.

‖we ʾînip t‖ : /we?nípt/ 'to sing'

‖tekpí s e‖ : /tekpíse/ 'I dip out water'

‖tekíp t‖ : /tekípt/ 'to dip out water'

‖xe?pí c e‖ : /xe?píce/ 'I crawl'

‖xe?ép in‖ : /xe?épin/ 'crawling'

1-stems. There is a group of stems, which have ‖1‖ (or ‖n‖) - Ø alternation stem-initially. In general, allomorphs without ‖1‖ (or ‖n‖) occur after stops and spirants, while those with ‖1‖ occur after vowels and semivowels. There are some exceptions. Semantically, members of this group indicate some locative-directional ideas.

Forms with ‖1‖	occurs after	Forms without ‖1‖	occurs after	meaning
1éhse	V, m, w, q	éhse	t, k, q, s	up
1éhne	V, y	éhne	k, q, s, y	down
1éhyek	V	éhyek	k, s, n	upstream
1ewí·k	V	ewí·k	t	downstream
1eylé·k	w, y, V	eylé·k	k, k^{w}, q, s, n	into
1éht	V	éht	k, q, n	out

Examples:

‖1éhse‖ ‖hi· qûq1éhse ye‖ : /hiqqoláhsaya/ 'she galloped up' ({qûqú·} 'gallop,' {e} indicative indefinite past)

Reproduced with permission of the copyright owner. Further reproduction prohibited without permission.

‖éhse‖ ‖wîs éhse s e‖ : /wisáhsasa/ 'I am moving up' ({wîs} 'move,' 'travel')

‖léhne‖ ‖wîle léhne c e‖ : /wileléhnece/ 'I am running down' ({wîlé·} 'run')

‖éhne‖ ‖wîs éhne c i k‖ : /wiséhnecix/ 'we are moving down'

‖léhyek‖ ‖hi ʾîpsqi léhyek s e‖ : /hiʔpsqiléhyekse/ 'he is walking upstream' ({hi} third person subject prefix, {ʾîpsqí} 'walk')

‖éhyek‖ ‖wîs éhyek t‖ : /wiséhyekt/ 'to go upstream'

‖lewí·k‖ ‖hi wîse lewí·k e‖ : /hiwselewí·ke/ 'she moved downstream'

‖ewí·k‖ ‖wet ewí·k s e‖ : /watawí·ksa/ 'I wade downstream' ({wet} 'wade')

‖leylé·k‖ ‖hi wx̣si léylek s e‖ : /hiwx̣siléylekse/ 'he sits in' ({wix̣s} 'sit,' ‖leylé·k‖ alternates with ‖léylek‖)

‖eylé·k‖ ‖hi tûk^{w} eylé·k s e‖ : /hitkuylé·kse/ 'he dives in' ({tûk^{w}} 'dive')

‖léht‖ ‖ʾîye léht s e‖ : /ʔiyeléhtse/ 'I am coming out of water' ({ʾîye} 'afloat,' 'in swimming')

‖éht‖ ‖ʾînek éht s e‖ : /ʔinekéhtse/ 'I am taking out' ({ʾînek} 'carry')

Reproduced with permission of the copyright owner. Further reproduction prohibited without permission.

Compound verb stems are of three types, (1) adverbial prefix + verb root, (2) verb root + verb root, (3) noun root + verb root.

The first type of compound stem is very common, the manner of action being expressed by the adverbial prefix, and the general direction or scene of action by the root. There are 139 adverbial prefixes. Examples:

{wîlé·} 'run'

‖wîlé· ke?y k s e‖ : /wilé·ke?ykse/
'I am running' ({ke?éy} general locomotion, {k} suffix of uncertain meaning)

‖wîlé· q̓uyim k s e‖ : /wilé·q̓uyimkse/
'I am running to the top' ({q̓uyím} 'to the top')

‖wîlé· wewiti s e‖ : /wilé·wewitise/
'I am running downstream' ({wewí·ti} 'downstream')

‖wîlé· welu· s e‖ : /wilé·welu·se/ 'I am running down to the river' ({wé·lu·} 'down to the river')

‖wilé· yewne c e‖ : /wilé·yewnece/ 'I am running over (e.g., hills, humps)' ({yéwne} 'over')

Reproduced with permission of the copyright owner. Further reproduction prohibited without permission.

{ʾîpsqí} 'on foot'

‖ʾîpsqí ke?y k s e‖ : /?ipsqíke?ykse/

'I am walking'

{kîpí·} 'trace (e.g. footprints)'

‖ʾe kîpí· ke?y k s e‖ : /?ekpí·ke?ykse/

'I am tracing' ({ʾe} third person object prefix)

{qîsím} 'in anger'

‖qîsím ke?y k s e‖ : /qisímke?ykse/

'I am going away in anger'

{qûqú·} 'gallop'

‖hi qûqú ke?y k s e‖ : /hiqqúke?ykse/

'he is galloping'

{sîwí} 'swim'

‖sîwí ke?y k s e‖ : /siwíke?ykse/ 'I am swimming'

{tú·ḱe} 'with a cane-like object'

‖tú·ḱe ke?y k s e‖ : /tú·ḱeke?ykse/

'I am limping with cane'

Examples of the second type of compound stem are:

{ʾînpí} 'seize, catch' + {ciklí·} 'turn'

‖ʾînpí s e‖ : /?inpíse/ 'I catch'

‖ciklí· c e‖ : /ciklí·ce/ 'I turn'

Reproduced with permission of the copyright owner. Further reproduction prohibited without permission.

‖ʾînp ciklí· tuq i m e‖ : /ʔinpciklí·toqima/
'I came back to get it' ({tuq} 'back,' {i} plural suffix, {m} motion toward the speaker or to the second person, {e} indicative indefinite past)

{ʾêwí·} 'shoot' + {tîwí·k} 'follow'

‖ʾêwí· s e‖ : /ʔewí·se/ 'I shoot'
‖tîwí·k c e‖ : /tiwí·kce/ 'I follow'
‖ʾe ʾêwíye tîwik c e‖ : /ʔeʔwíyetwikce/
'I shoot as I chase it' ({ʾe} third person object prefix)

A bound root morpheme may occur as the second member of a compound stem. {temé·w} 'be in excess,' which does not occur after {+}, but occurs immediately before suffixes, is an example.

{ć́í·q} 'speak' + {temé·w} 'be in excess'

‖ć́í·q c e‖ : /ć́í·qce/ 'I talk'
‖ć́iq temé·w n‖ : /ć́iqtamá·wn/ 'I talked too much' (‖n‖, an allomorph of {s} class marker)

The third type of compound stems, which show a kind of noun incorporation, appears to be rare and often occurs with nominalizing suffixes.

Reproduced with permission of the copyright owner. Further reproduction prohibited without permission.

Examples of noun root + verb root:

{qilílu·} 'raw hide' + {wéwye} 'beat'

‖qilílu·‖ : /qilílu·/ 'raw hide'

‖wéwye c e‖ : /wáwyaca/ 'I beat'

‖qillú· wewye c e‖ : /qilló·wawyaca/ 'I sing a departing song for warriors' (literally 'I beat raw hide')

{wélc} 'knife' + {'íte} 'put in'

‖wélc‖ : /wálc/ 'knife'

‖'íte s e‖ : /ʔitése/ 'I put in'

‖welc 'íte ṫes‖ : /walc̣íta·ṫas/ 'scabbard' (‖ṫes‖, an allomorph of {e?s} 'an object for ...ing')

{'é·tim} 'arm' + {ḱí·w} 'cut'

‖'é·tim‖ : /ʔá·tim/ 'arm'

‖'e·tim ḱí·w ni?n‖ : /ʔa·timḱí·wniʔn/ 'General O. O. Howard' (literally 'arm-cut') (‖ni?n‖, an allomorph of {i?n} 'one that is ... ed')

The following may be considered an example of a verb stem consisting of a noun root and a bound verb root.

{tiwé·t} 'shaman' + {tim} 'speak'

‖tiwé·t‖ : /tiwé·t/ 'shaman'

‖tiwetí· tim t‖ : /tiwetí·timt/ 'dreamer religion' (literally 'shaman-speaking')

Reproduced with permission of the copyright owner. Further reproduction prohibited without permission.

610.2 Copulative verb stems (cvS).

The single member of this class is {wé·} 'be,' 'possess,' e.g.,

/hiwé·ke so·yá·po·/ 'he was a white man'

({hi} third person subject prefix; ‖wé·k‖, an allomorph of {wé·}; ‖e‖ an allomorph of {ne} indicative remote past; {su·yé·} 'the white')

/ʔewé·ke ʔiwé·pne/ 'he had a wife'

({ʾe} third person object prefix; {ʾîwé·p} 'wife'; {ne} object case suffix 532.).

A copulative verb stem is always monomorphemic.

Reproduced with permission of the copyright owner. Further reproduction prohibited without permission.

620. Verb themes (vT).

Each of the above stem classes is defined by its occurrence in special thematic constructions. These constructions include classes of verb affixes which are shown below. The thematic affixes occur only with general verb stems.

621. Thematic affix classes.

All the suffixes have at least two morphologically conditioned groups of allomorphs: an s-group and a c-group. The verb stems and thematic suffixes may be labeled as to which group of allomorphs they occur with, the s-class or the c-class.

	class	subclass		number of members
Prefixes:				
	< pí· >	pí·	(reciprocal)	1
		ʼiné·	(reflexive)	5
	< wi >		(distributive)	1
	< sepé· >		(causative)	2
Suffixes:				
	< etk >		(aspectual)	21

Reproduced with permission of the copyright owner. Further reproduction prohibited without permission.

Examples of thematic prefixes:

< pí· >

The two subclasses of this class are reciprocal and reflexive prefixes.

The single member of the first subclass is {pí·} (reciprocal): ‖pí·‖ ~ ‖pi·‖ ~ ‖pi‖, e.g.,

‖pí·‖:

{pí· te?nwé· s i k} : /pí·te?nwesix/ 'we are talking to each other' ({te?nwé·} 'talk')

‖pi·‖:

{pí· te yú·x̣u? s i k} : /pi·tayó·x̣o?six/ 'we are warning each other' ({té·} 'by speech' adverbial prefix, {yú·x̣u?} 'caution,' 'wait')

‖pi‖:

{pí· titwe̲tí· u?} : /pittiwatíyó?/ 'we'll tell story to each other' ({titwe̲tí·} 'tell story,' {u?} future indicative).

{pi·} occurring with a plural suffix as in examples above indicates that the actor is animate, and elsewhere that a natural phenomenon is involved, e.g.,

/pí·wewkunise/ 'they meet' (of rivers, mountains)

/pí·wewkunisix/ 'they meet' (of people)

/pí·wyu·yce/ 'they separate' (of trails)

/pi·wyu·ycix/ 'they separate' (of people)

Reproduced with permission of the copyright owner. Further reproduction prohibited without permission.

The five members of the second subclass are:
{'iné·}, first person singular reflexive: ‖'iné·‖ ~ ‖'iné‖ ~ ‖'ilé·‖.

‖'iné·‖:

{'iné· sepelú·k s e} : /ʔiné·sepelu·kse/
'I hide myself' ({sepelú·k} 'hide')

‖'iné‖:

{'iné· wepe lí·k s e} : /ʔinú·pelikce/ 'I dress'
({wepe} 'dress'; {lí·k} 'be,' 'go')

‖'ilé·‖::

{'iné· té· 'îlé·twi s e} : /ʔilá·taʔlatwisa/
'I am tired from speaking' ({té·} 'by speech';
{'îlé·twi} 'tire')

{'imé·}, second person singular reflexive: ‖'imé·‖ ~ ‖'imé‖.

‖'imé·‖:

{'imé· sepelú·k s e} : /ʔimé·sepelu·se/
'you hide yourself'

‖'imé‖:

{'imé· wepe lí·k s e} : /ʔimú·pelikce/ 'you dress'

{'ipné·}, third person singular reflexive: ‖'ipné·‖ ~ ‖'ipné‖ ~ ‖'ipne‖.

‖'ipné·‖:

{'ipné· sepelú·k s e} : /ʔipné·sepelu·kse/
'he hides himself'

Reproduced with permission of the copyright owner. Further reproduction prohibited without permission.

‖'ipné‖:

{'ipné· wepe lí·k s e} : /ʔipnú·pelikce/

'he dresses'

‖'ipne‖:

{'ipné· wîlé· keʔéy k eʔí} : /ʔipnewileke?yke?í/

'car' ({wîlé} 'move quickly'; {keʔéy} 'move'; {k} suffix of uncertain meaning; {eʔí} agentive suffix; literally 'self-fast-move-er')

{nemé·}, first person plural reflexive: ‖nemé·‖ ~ ‖nemé‖.

‖nemé·‖:

{nemé· sepelú·k s i k} : /nemé·sepelu·ksix/

'we hide ourselves'

‖nemé‖:

{nemé· wepe lí·k s i k} : /nemú·pelikcix/

'we dress'

{'imemé·}, second and third person plural reflexive: ‖'imemé·‖ ~ ‖'imemé‖.

‖'imemé·‖:

{'imemé· sepelú·k s i k} : /ʔimemé·sepelu·ksix/

'you hide yourselves,' 'they hide themselves'

‖'imemé‖:

{'imemé· wepe lí·k s i k} : /ʔimemú·pelikcix/

'you (pl.) dress,' 'they dress'

Reproduced with permission of the copyright owner. Further reproduction prohibited without permission.

< wi > The single member of this class is {wi} (distributive): ‖wí·‖ ~ ‖wí‖ ~ ‖wi‖.

‖wí·‖:

{wi cilú· s e} : /wí·cilu·se/ 'I cook them separately' ({cilú·} 'cook')

‖wí‖:

{'e wí· heki i k} : /ʔewíhekitx/ 'look each one over!' ({heki} 'see'; {i} plural suffix; {k} imperative)

‖wi‖:

{'e né·s wí· weʔniki s} : /ʔené·swiweʔniks/ 'I named them one by one' ({né·s} plural object prefix; {weʔniki} 'name')

< sepé· > The two members of this class are {sepé·} (singular causative), and {sé·p} (plural causative).

{sepé·}: ‖sepé·‖ ~ ‖sepe‖ ~ ‖cepé·‖ ~ ‖cepe‖.

‖sepé·‖:

{sepé· ć'é'k s e} : /sapá·ć'aʔksa/ 'I cause it to hang'

‖sepe‖:

{pí· sepé· twe s i k} : /pí·sepetwecix/ 'we are mixing it' ({twe} 'be together')

Reproduced with permission of the copyright owner. Further reproduction prohibited without permission.

‖cepé·‖:

{cepé· p̓é̲y k s e} : /capá·p̓ayksa/ 'I wring it dry' ({p̓é̲y} 'drain,' 'become dry')

‖cepe‖:

{ʾe cepé· x̣é?p s e} : /?ecepex̣é?pse/ 'I put it underneath' ({x̣é?p} 'go under')

{sé·p}: ‖sé·p‖ ~ ‖sep‖ ~ ‖cé·p‖ ~ ‖cep‖.

‖sé·p‖:

{sé·p c̓é̲?k s e} : /sá·pc̓a?ksa/ 'I cause them to hang'

‖sep‖:

{sé·p tequ·yí·k s e} : /septequ·yí·kce/ 'I cause them to be known' ({tequ·yí·k} 'be known')

‖cé·p‖:

{ʾipné· wîs sé·p cú̲?u̲mk s e} : /?ipnawscá·pco?omksa/ 'he gathers them up' ({cú̲?u̲mk} 'rake')

‖cep‖:

{sé·p te̲klé̲y k s e} : /captaklá̲yksa/ 'I exchange them by mistake' ({te̲klé̲y} 'trade')

The thematic suffixes, represented by both s- and c-group allomorphs, are themselves either of the s- or the c-class. For example, {e̲tk} 'as an object goes by' is represented by ‖e̲tk‖ after an s-class verb stem and by ‖ne̲tk‖ after a c-class verb stem. {e̲tk} is of the s-class.

Reproduced with permission of the copyright owner. Further reproduction prohibited without permission.

Examples of thematic suffixes:

< etk > This class has 21 members, generally aspectual in meaning. The allomorphs and class affiliations of these thematic suffixes are:

	meaning	after an s-class stem	after a c-class stem	class
1. {etk}	as the object passes by	‖etk‖	´] ‖netk‖ -] ‖né·tk‖	s
2. {ce}	remote	--	‖ce‖	c
3. {é·ce}	on, upon	´] ‖ece‖ -] ‖é·ce‖	--	s
4. {ení·k}	trail behind	‖ení·k‖	--	c
5. {e·yik}	move in order to..., move around	e] ‖yik‖ -V]‖yé·yik‖ C] ‖é·yik‖ -] ‖e?yik‖	‖né·yik‖ ‖ne?yik‖	s
6. {ey}	benefactive, affective	(1)e]‖?y‖ -V]‖yé·y‖ ´C]‖ey‖ -]‖é·y‖ (2)e]‖?ny‖ -]‖e?ny‖	‖ne?y‖ ‖ne?ny‖	s

´] : after a stressed verb stem

-] : elsewhere (-V] : after a verb stem ending in a vowel other than the preceding)

i/e/C/V] : after a verb stem ending in ‖i‖/‖e‖/consonant/vowel

(1) : before {s e}, {teq}, {tetu}, {qe}, {k}
(2) : before inflectional suffixes {e}, {u?}, {s}, {t}

Reproduced with permission of the copyright owner. Further reproduction prohibited without permission.

		meaning	after an s-class stem	after a c-class stem	class
7.	{í·k}	inceptive	‖í·k‖	‖nik‖	s
8.	{k}	(uncertain)	--	‖k‖	s
9.	{kik}	away from here	‖kik‖	‖nikik‖	s
10.	{né·pi·k}	be prevented from	--	‖né·pi·k‖	s
11.	{qew}	right through	‖qé·w‖ ‖qew‖	‖neqé·w‖ ‖neqew‖	c
12.	{su?}	competitive	‖sú?‖	--	s
13.	{té·}	go away to	‖té·‖ ‖te‖	--	c
14.	{teʔté·}	intentional	‖teʔté·‖	‖teʔte‖	s
15.	{tneq̓i}	completive	‖tneq̓i‖	‖neq̓i‖	s
16.	{tuq}	reversative	‖tuq‖	‖tuq‖	s
17.	{twe}	commitative	‖twe‖	--	c
18.	{ʔtuyu}	negative	--	‖ʔtuyu‖	s
19.	{ú·}	directional	‖ú·‖	‖nú·‖	s
20.	{ú·kini}	as someone comes	‖ú·kini‖	‖nú·kini‖	s
21.	{wi}	return from	‖wi‖	‖wi‖	s

Reproduced with permission of the copyright owner. Further reproduction prohibited without permission.

{e̲tk} 'as an object goes by'

‖e̲tk‖:

{hi temé· sitk e̲tk u?} : /hitamá·sitkatko?/
'he will lasso as you go by' ({temé·} 'throw'; {sitk} 'encircle'; {u?} future)

‖né̲·tk‖:

{hi weh e̲tk s i k} : /hiwahná·tksix/
'they barked as we went by' ({weh} 'bark')

‖ne̲tk‖:

{ʼé·ẏs e̲tk s e} : /ʔá·ẏsnatksa/ 'I am happy to see it pass' ({ʼé·ẏs} 'be happy')

{ce} 'remote'

{pe· nim tiwí·k ce u?} : /pé·mtiwikcenu?/
'they will see them leave (from a place away from here)' ({pe·} 'he/they ... him/them'; {nim} 'see'; {tiwí·k} 'follow') cf. /pé·mtiwixnu?/ 'they will see them leave (from here)'

{é·ce} 'on,' 'upon'

‖é·ce‖:

{wix̣s lí·k é·ce s e} : /wix̣sliké·cese/
'I am sitting on something' ({wix̣s} 'sit'; {lí·k} 'do,' 'assume a position') cf.

Reproduced with permission of the copyright owner. Further reproduction prohibited without permission.

/wix̣slí·kse/ 'I am sitting'

‖ece‖:

{te?épe lí·k é·ce s e} : /te?épelikecese/
'I put something down upon something'
({te?épe} 'lie') cf. /te?épelikse/
'I put something down'

{eni·k} 'trail behind'

{hipí eni·k s e} : /hipeni·kse/ 'I eat after others' ({hipí} 'eat') cf. /hipíse/ 'I eat'

{e'yik} 'move in order to ...,' 'move around'; repetitive

‖yik‖:

{hi we· letp'é· e'yik s e} : /hiwe·letp'é·yikse/
'he is bumping around' ({hi} 'he/she/it'; {we·} 'swiftly'; {letp'é·} 'run into things')
cf. /hiwe·letp'é·se/ 'he runs into things'

‖yé·yik‖:

{'e mîc'í· e'yik s e} : /?amc'iyá·yiksa/ 'I came to hear it' ({'e} 'him/her/it'; {mîc'í·} 'hear')
cf. /?amc'í·sa/ 'I hear it'

‖é·yik‖:

{'înpí e'yik s e} : /?inpé·yikse/ 'I go to take something' ({'înpí} 'seize') cf. /?inpíse/
'I take something'

Reproduced with permission of the copyright owner. Further reproduction prohibited without permission.

‖e?yik‖:

{ʾé·c eʾ·yik:s e} : /?á·ca?yiksa/ 'I go in from another,' 'I go out and in' ({ʾé·c} 'go in') cf. /?á·csa/ 'I go in'

‖né·yik‖:

{ʾe hekí eʾ·yik s e} : /?e·xné·yikse/ 'I go around looking' ({hekí} 'see') cf. /?e·kíce/ 'I see it'

‖ne?yik‖:

{xí·ʾcem eʾ·yik s e} : /xí·ʾcemne?yikse/ 'I go being angry' ({xí·ʾcem} 'be angry') cf. /xí·ʾcemce/ 'I am angry'

{é·y} (benefactive, affective) indicates an action beyond the expected sphere of the subject, and means '(do something) for the benefit of (someone),' 'dare (to do something),' '(do something) damaging to (someone).'

‖?y‖:

{ʾe tîtú·le é·y s e} : /?attó·la?ysa/ 'I forget his' ({tîtú·le} 'forget') cf. /?attó·lasa/ 'I forget it'

‖yé·y‖:

{he·ní é·y s e} : /haniyá·ysa/ 'I make it for someone' ({he·ní} 'make') cf. /ha·nisa/ 'I make it'

Reproduced with permission of the copyright owner. Further reproduction prohibited without permission.

‖é·y‖:

{ʾînpí é·y s e} : /ʔinpé·yse/ 'I buy (from someone)' ({ʾînpí} 'seize') cf. /ʔinpíse/ 'I take'

‖ey‖:

{ʾe ʾé̂lik é·y s e} : /ʔaʔálikaysa/ 'I make fire for him' ({ʾé̂lik} 'kindle fire') cf. /ʔaʔáliksa/ 'I make fire'

‖neʔy‖:

{hité·me é·y s e} : /hité·meneʔyse/ 'I am reading for someone' ({hité·me} 'read') cf. /hité·mece/ 'I am reading'

‖ʔny‖:

{tîtú·le é·y e} : /titó·laʔnya/ 'I forgot his' ({e} indicative indefinite past) cf. /titó·laya/ 'I forgot'

‖eʔny‖:

{pe· ʾînikí é·y e} : /pé·ʔnikeʔnye/ 'he put (someone else's)' ({ʾînikí} 'place,' 'put') cf. /ʔinikíse/ 'I put'

{í·k} indicates that the action is about to begin.

‖í·k‖:

{pinîm í·k s e} : /pinmí·kse/ 'I am going to sleep' ({pinîm} 'sleep') cf. /pinîmse/ 'I am asleep'

Reproduced with permission of the copyright owner. Further reproduction prohibited without permission.

‖nik‖:

{té?wye í·k s e} : /té?wyenikse/ 'I am settling down to live' ({té?wye} 'live') cf. /té?wyece/ 'I am living'

{k} of uncertain meaning occurs after a stem when one of the following adverbial prefixes is found as one of the stem-constituents: {'île}, {'înek}, {'îpé·} 'with fist,' {'îpé·} 'due to smoke,' {'îpsqí}, {cú·ye}, {ké·}, {múx̣c}, {nîké·}, {qûqú·}, {sîlé·w}, {sîwí}, {té·}, {té·1}, {têx̣}, {ti?wele}, {tiyé·}, {tûk^{w}ele}, {tûk^{w}é·p}, {tulé·}, {we}, {we?lé·}, {we·le}, {we·p}, {wepé·}, {weqí}, {wé·w}, {wêyé·}, {wîle·}, {wîs}, {wîti·}, {wú·1}, e.g.,

{hi 'île tehém k s e} : /hi?letéhemkse/ 'it is dark from smoke' ({'île} 'in the fire'; {tehém} 'be dark') cf. /hitehémce/ 'it is dark'

{'înek péy k s e} : /?ináhpayksa/ 'I am bringing it' ({'înek} 'carry'; {péy} 'come') cf. /páyca/ 'I am coming'

{sîlé·w x̣í·c̓em k s e} : /siléwx̣ic̓emkse/ 'I am angry to see it' ({sîlé·w} 'see'; {x̣í·c̓em} 'be angry') cf. /x̣í·c̓emce/ 'I am angry'

Reproduced with permission of the copyright owner. Further reproduction prohibited without permission.

{kik} indicates remoteness of the starting point of an action, or contituity of an action (usually away from the speaker).

‖kik‖:

{hi kú· kik e} : /hikú·kike/ 'he went from a point away from here' ({kú·} 'go')
cf. /hikúye/ 'he went from here'

‖nikik‖:

{'e tîwí·k kik e} : /ʔetwíxnikike/ 'I followed it on' ({tîwí·k} 'follow')
cf. /ʔetwí·xne/ 'I followed it'

{né·pi·k} indicates that the action is prevented by something. The absence of allomorphs after an s-class stem in the present corpus may be fortuitous.

{wîlé· lí·k né·pi·k s e} : /wilalixná·pi·ksa/
'I am running away hindered' ({wîlé·} 'run'; {lí·k} 'go') cf. /wilalí·kca/
'I am running away'

{qew} indicates an action performed without interruptions.

‖qew‖:

{hi 'îse sú?p qew s e} : /hiʔcasóʔpqawca/
'he cuts it with a knife in a hurry'
({'îse} 'with knife'; {sú?p} 'cut') cf.

Reproduced with permission of the copyright owner. Further reproduction prohibited without permission.

/hi?cesú?pse/ 'he cuts'

‖qé·w‖:

{'înpí qew s e} : /?inpqá·wca/ 'I grab as I go' ({'înpí} 'seize') cf. /?inpíse/ 'I grab'

‖neqew‖:

{le?ém qew s e} : /la?ámnaqawca/ 'I empty it right through' ({le?ém} 'exhaust') cf. /la?ámca/ 'I finish it'

‖neqé·w‖:

{'e hekí qew s} : /?a·xnaqá·wn/ 'I see it as I go by' ({hekí} 'see') /hekíce/ 'I see it'

{su?} indicates that an action is performed in competition with someone else, e.g.,

{'e wîs tuk léhse su? s e} : /?awstokahsó?sa/ 'I shoot up against (someone)' {wîs} 'travel'; {tuk} 'shoot'; {léhse} 'up') cf. /wistokáhsasa/ 'I shoot upward'

{té·} indicates that one moves to another location for an action.

‖te‖:

{'îpé·ṫe té· s e} : /?ipé·ṫetese/ 'I go to scrape' ({'îpé·ṫe} 'scrape') cf. /?ipé·ṫese/

Reproduced with permission of the copyright owner. Further reproduction prohibited without permission.

'I scrape'

‖té·‖:

{'înpí té· s e} : /ʔinpté·se/ 'I go to take'
({'înpí} 'seize') cf. /ʔinpíse/ 'I take'

{te̓té·} indicates an action which is to take place in the immediate future, or the intention of the subject to perform an action.

‖te̓te‖:

{pi· 'e̲mk te̓té· s i k} : /pi'amkta̓tasí·x/
'we are going to be gathered' ({pi·} reciprocal prefix; {'e̲mk} 'gather') cf. /pí'amkcix/ 'we are gathered'

‖te̓té·‖:

{ti'kí te̓té· s e} : /ti'nkite̓té·se/
'I may die any minute' ({ti'nkí} 'die') cf. /ti'nkíce/ 'I die'

{tne̲q̓i} indicates that an action is completed.

‖tne̲q̓i‖:

{wîs 1é̲hse̲ tne̲q̓i e} : /wisáhsatna̓q̓iya/
'I finished traveling up' ({wîs} 'move'; {1é̲hse̲} 'up') cf. /wisáhsaya/ 'I traveled up'

Reproduced with permission of the copyright owner. Further reproduction prohibited without permission.

‖ne̲q̓i‖:

{pi· we·p ci?ye̲w tne̲q̓i e} : /pí·wapci?yawnaq̓iya/ 'they are through with fighting' ({we·p} 'with hand or paw'; {ci?ye̲w} 'kill') cf. /pí·wapci?yawna/ 'they were fighting'

{tu̲q} indicates a movement back toward the original point of reference.

‖tu̲q‖:

{wé·yik tu̲q s e} : /wá·yiktoqsa/ 'I am crossing back' ({wé·yik} 'go across') cf. /wé·yikse/ 'I am crossing over'

{ciklí· tu̲q s e} : /ciklí·toqsa/ 'I am turning back' ({ciklí·} 'turn') cf. /ciklí·ce/ 'I am turning around'

{twe} indicates that an action takes place in association with another person.

{hi tú·qi twe s e} : /hitú·qitwece/ 'he smokes with someone' ({tú·qi} 'smoke (pipe)') cf. /hitú·qise/ 'he smokes'

{t̓uyu} indicates negation.

{hi č̓í·q t̓uyu s e} : /hič̓í·qt̓uyuse/ 'he is not speaking' ({č̓í·q} 'speak') cf. /hič̓í·qce/ 'he speaks'

Reproduced with permission of the copyright owner. Further reproduction prohibited without permission.

{ú·} indicates that an action is directed toward an object or goal.

‖ú·‖:

{'înikí ú· s e} : /ʔinikú·se/ 'I put something for ...' ({'înikí} 'put') cf. /ʔinikíse/ 'I put something'

‖nú·‖:

{hi pé̲y ú· s e} : /hipaynó·sa/ 'he comes to see someone' ({pé̲y} 'come') cf. /hipá·yca/ 'he comes'

{ú·kini} 'indicates that an action takes place as an object approaches the subject.

‖ú·kini‖:

{'e 'înpí ú·kini s e} : /ʔeṅpú·kinise/ 'I take it as it comes' ({'înpí} 'seize') cf. /ʔeṅpíse/ 'I take it'

‖nú·kini‖:

{pe· we·p ci?ye̲w ú·kini s e} : /po·pci?yawnó·kinisa/ 'he kills him as he comes' cf. /pó·pci?yawca/ 'he kills him'

{wi} indicates that an action is completed and the subject is returning to the point of origin.

Reproduced with permission of the copyright owner. Further reproduction prohibited without permission.

{'imí wi s e} : /ʔimíwise/ 'I am returning from digging roots' ({'imí} 'camp to dig roots') cf. /ʔimícix/ 'we are camping for digging roots'

{wi} may occur after {té·}, e.g.,

{'e hekí té· wi s e} : /ʔe·kté·wise/ 'I am returning after going to see it' ({hekí} 'see') cf. /ʔe·kté·se/ 'I go to see it'; /ʔe·kíce/ 'I see it'

Reproduced with permission of the copyright owner. Further reproduction prohibited without permission.

622. Construction of verb themes.

The varying internal structures of the verb theme (vT) are described in the following sections. The elements surrounding the stem class markers are references to the preceding chart of affixes.

622.1 General verb theme (gvT). The two types of general verb themes are: (1) those with general verb stem (gvS) as a constituent, and (2) those with substantive stems (sS) as a constituent.

gvT:	pí·	wi	sepé·	gvS	etk
1.		x	x	x	
2.	x	x		x	
3.	x			x	x

Examples:

1. {wi sepé· x̣é?p} in /?ene·swicepex̣é?psene/
'I put them underneath separately' ({'e} third person object prefix; {ne·s} plural object prefix; {x̣é?p} 'go under'; {s} class marker; {e} singular subject prefix; {ne} indicative remote past)

2. {'imemé· wi tekléy} in /?imama·witkaláyna/
'they changed clothes' ({tekléy} 'exchange')

3. {pí· č́í·q ú·} in /pič́ix̣nú·six/ 'we are arguing over it' ({č́í·q} 'talk')

Reproduced with permission of the copyright owner. Further reproduction prohibited without permission.

In addition to the preceding is the second type of general verb themes which is denominative. The following class of special suffixes enter into such verb theme construction:

< hí· >. The five members of this class are:

{hí·} 'put on,' 'go up to (?)': ‖hí·‖ ~ ‖hi‖, e.g.,

‖hí·‖:

{túhun hí· s e} : /tohoní·sa/ 'I put on trousers' ({túhun} 'trousers')

‖hi‖:

{kepú· hí· s e} : /kapó·hisa/ 'I put on coat' ({kepú·} 'coat')

{ʾînek tú·yem hí· s e} : /ʔinaxtoyá·misa/ 'I carry it to the top' ({tú·yem} 'summit')

{né·nek} 'become'

{léwtiwe· né·nek s e} : /lawtiwa·ná·naksa/ 'I become a friend' ({léwtiwe·} 'friend')

{yé·k} 'go to get'

{cé·qet yé·k s e} : /ceqetyé·kse/ 'I go to get blackberries' ({cé·qet} 'blackberry')

Reproduced with permission of the copyright owner. Further reproduction prohibited without permission.

{é·w} 'become characterized by'

{tésq é·w s} : /tasqá·ws/ 'I became fat'

({tésq} 'grease,' 'fat')

{wi} 'act as,' 'do': ‖wí·‖ ~ ‖wi‖, e.g.,

‖wí·‖:

{'iyéq́is wi s e} : /ʔiyeq́iswí·se/ 'I fight'

({'iyéq́is} 'hot')

‖wi‖:

{qepsíʔs wi s e} : /qepsiʔíswise/ 'I do evil'

'I sin' ({qepsíʔs} 'bad')

The general verb themes with substantive stem as a constituent may be summarized as follows:

gvT: nS/aS < hí· >.

All five members of < hí· > class occur with general noun stems (nS), and {wi} may also occur with adjective stems (aS).

622.2 Copulative verb theme (cvT). Copulative themes are always coterminous with copulative verb stems (cvS):

cvT: cvS.

Example:

{wé·} in /hiwé·ke/ 'he was' ({hi} third person subject prefix; ‖e‖, an allomorph of {ne} indicative remote past 638.5)

Reproduced with permission of the copyright owner. Further reproduction prohibited without permission.

630. Verb inflection.

The following four classes of prefixes and four classes of suffixes occur as inflectional elements in constituency with verb themes:

Prefixes:

class		number of members
< hi >	(subject/object prefixes)	2
< pe• >	(subject and object prefix)	1
< pe >	(plural subject prefix)	1
< ne•s >	(plural object prefix)	1

Suffixes:

< s >	(class marker suffix)	1
< e >	(number suffixes)	2
< m >	(locative suffixes)	2
< k >	(tense-modal suffixes)	14

Reproduced with permission of the copyright owner. Further reproduction prohibited without permission.

631. < hi > class.

The two members of this class are {hi} and {'e}.

{hi} (third person subject prefix) : ‖hí·‖ before {wé·} 'be' followed by {s} and {+}; ‖hi‖ elsewhere, e.g.,

‖hí·‖:

{hi wé· s} : /hí·wes/ 'he is'

‖hi‖ :

{hi titwetí· s e} : /hittiwatí·sa/ 'he tells a story' ({titwetí·} 'tell a story')

{hi 'eíwí s e} : /he?eíwíce/ 'he spends winter' ({'eíwí} 'spend winter')

{'e} (third person object prefix) indicates that the object is in the third person, or more specifically, that the object is either not closely related to the speaker or not in possession of the speaker. When an independent substantive is in the sentence as a referent, the object is marked by {ne} (532). {'e}: ‖'ew‖ before ‖'V‖ or ‖hV‖; ‖'e‖ elsewhere.

‖'ew‖:

{'e 'íní· s e} : /?ewní·se/ 'I am giving it' ({'íní·} 'give')

{'e hí s e} : /?ewíce/ 'I speak to him' ({hí} 'speak')

Reproduced with permission of the copyright owner. Further reproduction prohibited without permission.

‖'e‖:

{'e wepe lí·k s e} : /ʔu·pelí·kce/ 'I dress up someone not closely related to me' ({wepe} 'dress'; {lí·k} 'be,' 'go,' 'assume a position') cf. /wepelí·kce/ 'I dress up (someone close to me, e.g., wife, child, horse)'

Exceptionally, ‖'e‖ occurs before {'êwí·} 'shoot (arrow)' and before {hekí} 'see.'

{'e 'êwí· s e} : /ʔeʔwí·se/ 'I shoot at it'

{'e hekí s e} : /ʔe·kíce/ 'I see it'

632. < pe· > class.

The single member of this class is {pe·} indicating that the subject and the object are in non-identical third person. {pe·}: ‖pé·‖, ‖pe·‖ or ‖pe‖.

‖pé·‖:

{pe· wéwluq s e} : /pé·wewluqse/ 'he wants it' ({wéwluq} 'want') cf. /ʔewéwluqse/ 'I want it'

‖pe·‖:

{pe· titwetí· u?} : /pa·ttiwatíyoʔ/ 'he will tell him a story' cf. /ʔattiwatíyoʔ/ 'I will tell him a story'

‖pe‖:

{pe· 'înpí s e} : /peʔénpse/ 'he seizes him' ({'înpí} 'seize')

Reproduced with permission of the copyright owner. Further reproduction prohibited without permission.

633. < pe > class.

The single member of this class is {pe} indicating the plurality of the subject. {pe}: ‖pe‖ ~ ‖pé·‖ ~ ‖pé‖.

‖pe‖:

{pe titwetí· u?} : /pattiwatíyo?/ 'we will tell a story' cf. /pa·ttiwatíyo?/ 'he will tell him a story'

‖pé·‖:

{hi pe kú· s} : /hipé·kus/ 'they just left' ({kú·} 'go')

‖pé‖:

{'e pe we·p ci?yew k ki} : /?apó·pci?yawnki/ 'we killed him' ({we·p} 'with hand or paw'; {ci?yew} 'kill'; {k} indicative present; {ki} 'away from the speaker')

634. < ne·s > class.

The single member of this class is {ne·s} indicating the plurality of the object. {ne·s}: ‖né·c‖ ~ ‖nec‖ before ‖'‖; ‖né·s‖ ~ ‖nes‖ elsewhere.

‖né·c‖:

{'e ne·s 'înpi s e} : /?ené·c̓inpse/ 'I seize them'

‖nec‖:

{'e ne·s 'ecú? s e} : /?anac̓acó?sa/ 'I go into them' ({'ecú?} 'go in') cf. /?acó?sa/ 'I go in'

Reproduced with permission of the copyright owner. Further reproduction prohibited without permission.

‖né·s‖:

{ʾe ne·s mîćí· s e} : /ʔaná·smićisa/ 'I hear them' ({mîćí·} 'hear')

‖nes‖:

{hi ne·s titwetí· u?} : /hinastitwatíyo?/ 'he will tell us a story'

{ʾe ne·s titwetí· u?} : /ʔanastitwatíyo?/ 'I will tell them a story'

Reproduced with permission of the copyright owner. Further reproduction prohibited without permission.

635. < s > class..

The single member of this class is {s} (class marker). {s} does not occur with the following tense-modal suffixes: frequentqtive present, imperative (without locative suffixes). {s} has the following allomorphs:

Environments	after s-class verb theme	after c-class verb theme
before I	‖s‖	‖c‖
before II	‖s‖	C] ‖in‖, -] ‖n‖
before III	‖t‖	‖n‖
before IV	ø	‖n‖
before V	ø	C] ‖ne‖, -] ‖n‖
before VI	ø	C] ‖ni‖, -] ‖n‖

Environments (Arabic numerals refer to the tense-modal suffixes in 638.):

I: tense-modals 1, 4, 5, 8

II: tense-modal 2 (without locative suffixes)

III: tense-modal 7

IV: tense-modals 2 (with locative 1), 3 (without locatives, or with locative 1), 6, 9, 11, 12 (with plural), 13 (with plural), 14 (with locative 1)

V: tense-modals 12 (with singular), 13 (with singular)

VI: tense-modals 2 (locative 2), 3 (with locative 2)

Reproduced with permission of the copyright owner. Further reproduction prohibited without permission.

Examples:

‖s‖ (before I):

{hipí s e} : /hipíse/ 'I eat' ({hipí} 'eat')

‖c‖ (before I):

{hekí s e} : /hekíce/ 'I see' ({hekí} 'see')

‖s‖ (before II):

{hi pe· kú· s} : /hipé·kus/ 'they just left' ({kú·} 'go')

‖in‖ (before II):

{wú·y s} : /wú·yin/ 'I just escaped' ({wú·y} 'run away')

‖n‖ (before II):

{hi hí s} : /hihín/ 'he just said' ({hí} 'say')

‖t‖ (before III):

{'e 'îpt́é· s eq} : /ʔaʔpt́á·taχ/ 'I could hit him' ({'îpt́é·} 'hit')

‖n‖ (before III):

{'e tîwí·k s eq} : /ʔatwí·xnaχ/ 'I would have gone with him' ({tîwí·k} 'accompany, follow')

‖n‖ (before IV):

{hi pe péy s m} : /hipapáynim/ 'they have come' ({péy} 'arrive')

‖ne‖ (before V):

{'e hekí s qeqe} : /ʔá·xnaqaqa/ 'many times you may have seen it' ({qeqe} frequentative past)

Reproduced with permission of the copyright owner. Further reproduction prohibited without permission.

‖n‖ (before V):

{ʾîpsqí lé· s qeqe} : /ʔipsqilá·nqaqa/

'I walked around' ({ʾîpsqí} 'on foot'; {lé·} 'move,' 'move around')

‖ni‖ (before VI):

{pe ciklí· s ki} : /peckilí·niki/ 'we went on home' ({pe} plural subject prefix; {ciklí·} 'return'; {ki} 'away from the speaker')

‖n‖ (before VI):

{ʾe pe we·p ciʔyew s ki} : /ʔapó·pciʔyawnki/ 'we killed it' ({ʾe} third person object prefix; {we·p} 'with hand or paw'; {ciʔyew} 'kill')

636. < e > class.

The two members of this class are {e} and {i}.

{e} (singular) does not occur with tense-modal suffixes 2, 3, 6, 7, or 9, and shows the following allomorphy:

with tense-modal 1 (without locatives) .....‖e‖

with tense-modal 1 (with locatives), 4, or 5 and after a stressed stem .....‖e‖

with tense-modal 1 (with locatives), 4, or 5 and after an unstressed stem .....‖é·‖

with tense-modal 10 .....‖tu‖

with tense-modals 11, 12, 13, 14 ..... ø.

Reproduced with permission of the copyright owner. Further reproduction prohibited without permission.

Examples:

‖e‖:

{hipí s e} : /hipíse/ 'I eat'

{tîwí·k s e m} : /tiwí·kcem/ 'you are following me' ({tîwí·k} 'follow,' 'accompany')

‖é·‖:

{ʾe hipí s e ne} : /ʔe·psé·ne/ 'I had eaten it'

‖tu‖:

{ʾé·t te tu} : /ʔá·ttato/ 'I go in and out'

({ʾé·t} 'go out'; {te} frequentative present)

{i} (plural) does not occur with tense-modal suffixes 2, 3, 6, 7, or 9, and shows the following allomorphy:

with tense-modals 1, 4, 5, 8 and after a stressed stem	‖i‖
with tense-modals 1, 4, 5, 8 and after an unstressed stem	‖í·‖
with 10	‖ʔnik‖
with 14 (without locatives) after a vowel, or with 14 (with locatives)	‖tk‖
with 14 (without locatives) after a consonant	‖itk‖
with 11, 12, or 13	ø

Reproduced with permission of the copyright owner. Further reproduction prohibited without permission.

Examples:

‖i‖:

{hi té·ʔwye s i k} : /hité·ʔwyecix/ 'they dwell' ({té·ʔwye} 'dwell')

‖í·‖:

{hipí s i k} : /hipsí·x/ 'we eat' ({hipí} 'eat')

‖ʔnik‖:

{ʾe hekí eʾ·yik te i} : /ʔe·xné·yikte·nix/ 'we go to see him many times' ({hekí} 'see'; {eʾ·yik} 'move in order to ...' 620; {te} frequentative present)

‖tk‖:

{wepté· i} : /wepté·tx/ 'put feather on!' (to pl.) (e.g., on arrows) ({wepté·} 'put feather on')

‖itk‖:

{ʾé·c i} : /ʔá·citx/ 'go in!' (to pl.) ({ʾé·c} 'go in')

637. < m > class.

The two members of this class are {m} and {ki}. {m} (locative 1) indicates an action toward the speaker (with second or third person subject), or an action toward the second person (with first person subject).

Reproduced with permission of the copyright owner. Further reproduction prohibited without permission.

The allomorphs are:

with tense-modals 1, 3(after a vowel-final s-class theme), 4 (with singular), 10 (with singular), 14 (after a vowel-final s-class theme) ..... ‖m‖

with tense-modal 4 (with plural) ..... ‖nm‖

with tense-modal 6 ..... ‖kum‖

with tense-modals 2 (after a consonant-final s-class theme, or after a c-class theme), 3 (after a consonant-final s-class theme, or after a c-class theme), 14 (after a consonant-final s-class or after a c-class theme) ..... ‖im‖.

Examples:

‖m‖:

{tîwí·k s e m} : /tiwí·kcem/ 'you are following me' ({tîwí·k} 'accompany,' 'follow')

‖nm‖:

{ʾe wîyé· hekí s i m qe̲} : /ʔawyá·kcinmqæ/ 'we were looking at it as we came' ({wîyé·} 'as one moves'; {hekí} 'see'; {qe̲} indicative recent past)

‖kum‖:

{hi ʾé̲ʔt uʔ m} : /haʔáto?kom/ 'he will come out' ({uʔ} indicative future; {ʾé̲·t} 'move out')

Reproduced with permission of the copyright owner. Further reproduction prohibited without permission.

‖im‖:

{hi pe pé·y s m e} : /hipapá·ynima/ 'they arrived here' ({pé·y} 'arrive')

{ki} (locative 2) indicates a motion away from the speaker. The allomorphs are:

with tense-modal 1 or 2 .....‖ki‖

with tense-modal 3 .....‖kik‖

with tense-modal 4 .....‖nqe‖

with tense-modal 5 .....‖nqiq‖.

Examples:

‖ki‖:

{pe wé·yik ki} : /pewé·yixki/ 'we crossed over (to the other side)' ({wé·yik} 'cross')

‖kik‖:

{hi ciklí· tuq kik e} : /hickilí·toxkika/ 'he went on back' ({ciklí·} 'turn'; {tuq} 'back'; {e} indicative indefinite past)

‖nqe‖:

{'e hekí s e ki qe} : /ʔa·kcá·nqaqa/ 'I have been to see him' ({qe} indicative recent past)

‖nqiq‖:

{'e hekí s i ki e} : /ʔa·kcí·nqiqa/ 'we have been to see him (long ago)' ({e} indicative indefinite past)

Reproduced with permission of the copyright owner. Further reproduction prohibited without permission.

638. < k > class.

This class has 14 members generally indicating tense and modes.

638.1 {k} (indicative present) covers actual events of the present:

after {i} (plural) and with a locative (637)..‖n‖

elsewhere after {i} (plural).....‖k‖

elsewhere ..... ø

Examples:

‖n‖:

{hi té·ʔmik s i k m} : /hité·ʔmiksinm/

'they came down' ({té·ʔmik} 'go down')

‖k‖:

{hi té·ʔmik s i k} : /hité·ʔmiksix/

'they move down'

‖ø‖:

{hi té·ʔmik s e} : /hité·ʔmikse/ 'he moves down'

638.2 {indicative perfect} (to be abbreviated as {IP}) is morphophonemically zero.

{wú·y s IP} : /wú·yin/ 'I just escaped'

{IP} is used to describe an action just completed, or to constitute a hortatory construction with {ke},

/kex ʔehékin/ 'let me see'

Reproduced with permission of the copyright owner. Further reproduction prohibited without permission.

638.3 {e} (indicative indefinite past) is used to describe an action that was completed at any time in the past. {e}: ‖ye‖ after a vowel; ‖e‖ elsewhere.

‖ye‖:

{titwetí· e} : /titwatíya/ 'I told a story'

‖e‖:

{pe· hipí e} : /pehípe/ 'he ate it'

({hipí} 'eat')

638.4 {qe} (indicative recent past) is used to (1) describe an action that was completed earlier on the same day or up to a few days prior to the time of speech, or to (2) describe an incomplete action.

{titwetí· s e qe} : /titwatisá·qa/

'I told a story (this morning, yesterday, a few days ago)'

{ʼîní s e qe} : /ʔinisá·qa/ 'I was giving it to you (but you did not take it)' ({ʼîní} 'give')

638.5 {ne} (indicative remote past) is used to describe an action completed in a time that precedes the area covered by {qe} 638.4, especially to tell myths.

{têqe péy s i ne} : /taqapáycina/ 'we dropped in (last year)' ({têqe}'briefly'; {péy} 'come')

Reproduced with permission of the copyright owner. Further reproduction prohibited without permission.

638.6 {u?} (indicative future) is used to describe an action in future time, and future conditions, e.g.,

/ćalawí hiwekú? tá?c lé·heyn watí·sx, ka· ?í·n kiyú?./ 'If it is fine tomorrow, I will go.' ({ćelewí} 'if'; {hi} third person subject prefix; {wé·} 'be'; {hi wé· u?} : /hiwekú?/; {té?c} 'good'; {lé·heyn} 'day'; {wetí·sk} 'tomorrow,' 'yesterday'; {'í·n} 'I'; {kú· u?} : /kiyú?/, {kú·} 'go')

{u?} : ‖yu?‖ after a vowel; ‖ú?‖ elsewhere after an unstressed theme; ‖u?‖ elsewhere.

‖yu?‖:

{hení· u?} : /haní·yo?/ 'I will make' ({hení·} 'make')

‖ú?‖:

{'e hipí u?} : /?e·pú?/ 'I will eat it' ({hipí} 'eat')

‖u?‖:

{pe té·?wye í·k u?} : /peté?wyeniku?/ 'we are going to settle down to live' ({pe} plural subject prefix 633; {té·?wye} 'dwell'; {í·k} inceptive suffix 620)

Reproduced with permission of the copyright owner. Further reproduction prohibited without permission.

638.7 There are three morphemes that are used to describe conditions contrary to fact: {eq} conditional present, {neq} conditional perfect, {u?qe} conditional past. {neq} occurs very infrequently. {eq} and {u?qe} are used interchangeably, as noted in the four examples below. The name such as conditional present in this case is for identification of the morphemes rather than for accurate description of their uses. All four sentences below mean 'if he came yesterday, I would have seen him.'

1. /ćalawí hipá·yno?qa ?ipí watí·sx, ka· ?a·xnó?qa./
2. /ćalawí hipá·yno?qa ?ipí watí·sx, ka· ?a·kín̓ax̣./
3. /ćalawí hipá·ýnax̣ ?ipí watí·sx, ka· ?a·xnó?qa./
4. /ćalawí hipá·ýnax̣ ?ipí watí·sx, ka· ?a·kín̓ax̣./

({ćelewí} 'if'; {pé·y} 'come'; {ʾipí} 'he/she/it'; {wetí·sek} 'tomorrow,' 'yesterday'; {ke·} 'and,' 'then'; {hekí} 'see')

Sentence 2 was given as the "best."

{eq} : ‖ʾé·q‖ or ‖ʾeq‖ after an unstressed stem; ‖eq‖ elsewhere.

‖ʾé·q‖:

{hi wé· s eq} : /hiwat̓á·x̣/ 'it would have been'

‖ʾeq‖:

{ʾe hekí s eq} : /?a·kín̓ax̣/ 'I would have seen him'

‖eq‖:

{ʾe ʾîpt̓é· s eq} : /?a?pt̓á·tax̣/ 'I could hit him'

Reproduced with permission of the copyright owner. Further reproduction prohibited without permission.

{neq} : ‖'neq‖ after an unstressed stem; ‖neq‖ elsewhere.

‖'neq‖:

{kú· s e neq} : /kosá·ʔnax̣/ 'I would be doing'

({kú·} 'do')

‖neq‖:

{'e kú· ú· s e neq} : /ʔakiyó·sanax̣/

'you would have been advancing toward it'

({'e} third person object prefix; {kú·}

'go'; {ú·} directional suffix)

{u?qe} is used, besides the conditional expression noted above, to describe the capability or potentiality of an action on the part of the subject, and to describe an action in interrogative and negative statements, e.g.,

/ʔí·n ʔa·xnóʔqa./ 'I can see.' ({'í·n} 'I';

{heki} 'see'; {'e hekí s u?qe} : /ʔa·xnóʔqa/)

/we·t ʔa·xnóʔqa./ 'can you see it?' ({we·t}

question particle)

/we·t̓u ʔa·xnóʔqa./ 'I can not see it.'

({we·t̓u} 'no,' 'not')

{u?qe} : ‖yu?qe‖ after a vowel; ‖ú?qe‖ elsewhere after an unstressed stem; ‖u?qe‖ elsewhere. This may be further analysed in {u?} and {qe}.

Reproduced with permission of the copyright owner. Further reproduction prohibited without permission.

‖yu?qe‖:

{'e 'îpt́é· s u?qe} : /?a?pt́á·yo?qa/

'I could hit him' ({'îpt́é·} 'hit')

‖ú?qe‖:

{'e hekí s u?qe} : /?a·xnó?qa/ 'I would have seen him'

‖u?qe‖:

{pe wîs leylé·k u?qe} : /pawsayná·ko?qa/

'we could go in' ({pe} plural subject prefix; {wîs} 'travel,' 'camp'; {leylé·k} 'into')

638.8 The four morphemes describing frequentative or customary actions are: {te} frequentative present, {q} frequentative indefinite past, {qeqe} frequentative recent past, and {qene} frequentative remote past.

{te} : ‖té·‖ after an unstressed stem; ‖te‖ elsewhere.

‖té·‖:

{'e hekí te e} : /?e·kté·tu/ 'I see him always'

‖te‖:

{'é·t te e} : /?á·ttato/ 'I go in and out'

({'é·t} 'go out')

Reproduced with permission of the copyright owner. Further reproduction prohibited without permission.

{q} : ‖e?nik‖ after {i} (plural suffix); ‖q‖ elsewhere.

‖e?nik‖:

{cepe? lé· s q} : /cepe?lé·ne?nix/ 'we used to work' ({cepe?} meaning uncertain; {lé·} 'move,' 'move around')

‖q‖:

{hi qûqú· lé· s q} : /hiqqolá·nx̣/ 'he was in the habit of galloping around' ({qûqú·} 'gallop'; {lé·} 'move around')

{qeqe} shows the following allomorphy:

with {e} (singular) ..... ‖qeqe‖

with {i} (plural)

after a stressed vowel-final stem ..... ‖ye?niqe‖

after an unstressed consonant-final stem. ‖e?ní·qe‖

elsewhere ..... ‖e?niqe‖

Examples:

‖qeqe‖:

{ʾîpsqí lé· s e qeqe} : /?ipsqilá·nqaqa/ 'I used to walk around' ({ʾîpsqí} 'walk')

‖ye?niqe‖:

{qiní· s i qeqe} : /qiníya?niqa/ 'we used to dig' ({qini·} 'dig')

Reproduced with permission of the copyright owner. Further reproduction prohibited without permission.

‖e?ní·qe‖:

{hi kú· s i qeqe} : /hikya?ní·qa/ 'they used to go' ({hi} third person subject prefix; {kú·} 'go')

‖e?niqe‖:

{hi wú·y s i qeqe} : /hiwó·yna?niqa/ 'they used to run away' ({wú·y} 'run away')

{qene} shows the following allomorphy:

with {e} (singular) .....‖qene‖

with {i} (plural)

after a stressed vowel-final stem.....‖yenixne‖

after an unstressed consonant-final stem..‖ení·xne‖

elsewhere .....‖enixne‖

Example:

‖qene‖:

{pé·x̣wi s e qene} : /pá·x̣wiqana/ 'I used to steal (but not any more)' ({pé·x̣wi} 'steal')

‖yenixne‖:

{té·l wewí·ti s i qene} : /telwewitiyenixne/ 'we used to run downstream' ({té·l} 'run,' 'gallop'; {wewí·ti} 'downstream')

‖ení·xne‖:

{hipí s i qene} : /hipení·xne/ 'we used to eat'

Reproduced with permission of the copyright owner. Further reproduction prohibited without permission.

638.9 {k} (imperative) is used to make directive statements. {k} shows the following allomorphs:

with {e} (singular) and without locatives

after an s-class theme ending in ‖i‖.....‖k‖

after an s-class theme ending in other vowels.‖y‖

after an s-class theme ending in a consonant.. ø

after a c-class theme ending in {té·}620..... ø

after a c-class theme ending in a vowel, ‖y‖, ‖w‖ or ‖l‖.....‖n‖

elsewhere.....‖in‖

elsewhere..... ø.

Examples:

‖k‖:

{titweti· e k} : /titwatíx/ 'tell a story!'

(to one person) ({titweti·} 'tell a story')

‖y‖:

{'e tîtú·le e k} : /ʔattó·lay/ 'forget it!'

(to one person) ({tîtú·le} 'forget')

ø : (after an s-class theme)

{wîlé· keʔéyk e k} : /wilé·keʔyx/ 'run!'

({wîlé·} 'run'; {keʔéyk} 'go')

ø : (after a c-class theme)

{'îpsqi léhne e k} : /ʔipsqiléhne/ 'walk down!'

(to one person) ({léhne} 'down')

Reproduced with permission of the copyright owner. Further reproduction prohibited without permission.

‖n‖:

{hí e k} : /hín/ 'speak!' (to one person)

({hí} 'speak')

‖in‖:

{'e hekí e k} : /ʔehékin/ 'look it over!'

(to one person) ({hekí} 'see')

ø : (with {i} plural)

{'e wi hekí i k} : /ʔewíhekitx/ 'look over

each one of them!' (to more than one person)

({wi} distributive prefix)

ø : (with locative)

{kú· s m e} : /kú·m/ 'come!' (to one person)

({kú·} 'go'; {m} toward the speaker)

{kú· s m i} : /kú·mtx/ 'come!' (to more than

one person)

Reproduced with permission of the copyright owner. Further reproduction prohibited without permission.

639. Inflectional suffix complex and verb constructions.

639.1 Inflectional suffix complex (isc).

Of the four classes of inflectional suffixes, < m > class (locative) is optional, and the rest are obligatory. The order of the four suffix classes varies depending on the tense-modal element involved.

Tense-modals	Reference	s	k	m	e	m	k	m
1. indicative present	638.1	x			x		x	[x]
2. indicative perfect	638.2	x			ø		x	[x]
3. indicative indef. past	638.3	x			ø	[x]	x	
4. indicative recent past	638.4	x			x	[x]	x	
5. indicative remote past	638.5	x			x	[x]	x	
6. indicative future	638.6	x			ø		x	[x]
7. conditional present	638.7	x			ø		x	
8. conditional perfect	638.7	x			x		x	
9. conditional past	638.7	x			ø		x	
10. frequentative present	638.8	ø	x		x			[x]
11. frequentative indef. past	638.8	x			x		x	
12. frequentative recent past	638.8	x			x		x	
13. frequentative remote past	638.8	x			x		x	
14. imperative	638.9	{ x / ø		x	x / x		x / x	

ø : non-occurrence

[ ] : optional

Reproduced with permission of the copyright owner. Further reproduction prohibited without permission.

For tense-modals 6, 10 and 14, the position of the optional class of locatives is based on locative 1 (637) alone; for the tense-modal 5, it is based on locative 2 (637) alone. Locatives, particularly locative 2, occur infrequently.

Of the fourteen tense-modal suffixes, five (2, 3, 6, 7, 9) occur without singula-plural distinction. For these five tenses, the number distinction is indicated by the presence or absence of the plural subject prefix (633). Accordingly, if the paradigm is completely filled out, the theoretically possible inflectional suffix combinations are 2 (number of members of < e > class) x 3 (possibilities of locatives: locative 1, locative 2, no locatives) x (14 - 5) + 3 x 5 = 69. In the present corpus, only 39 combinations are found possibly due either to infrequency of certain combinations or skewed paradigm.

Reproduced with permission of the copyright owner. Further reproduction prohibited without permission.

The distribution of the 39 combinations are:

tense-modals	no locatives		locative 1: {m}		locative 2: {ki}	
	sg.	pl.	sg.	pl.	sg.	pl.
1. indicative present	x	x	x	x	x	x
2. indicative perfect	x		x		x	
3. indicative indef. past	x		x		x	
4. indicative recent past	x	x	x	x	x	
5. indicative remote past	x	x				x
6. indicative future	x		x			
7. conditional present	x					
8. conditional perfect	x	x				
9. conditional past	x					
10. frequentative present	x	x	x			
11. frequentative indef. past	x	x				
12. frequentative recent past	x	x				
13. frequentative remote past	x	x				
14. imperative	x	x	x	x		

Reproduced with permission of the copyright owner. Further reproduction prohibited without permission.

639.2 The verb constructions in which the inflectional affix classes above participate are:

Vg = general verb

Vg : [hi] [pe] [ne·s] gvT isc

(isc = inflectional suffix complex 639.1)

Example: < hi > < pe > < ne·s > gvT < s > < e > < k >

{ hi pe ne·s qe?én s e }

‖ hi pe ne·s qe?én n e ‖

/ hipana·sqa?ánna /

they respected us

Vg : [pe·] gvT isc

Example: < pe· > gvT < s > < e > < k >

gvS < etk >

{ pe· kú· ú· s i ne }

‖ pe kiy ú· s i ne ‖

/ pekiyú·sine /

they went to them

Vg : [hi] sT

Example: < hi > sT

{ hi té?c }

‖ hi té?c ‖

/ hitá?c /

it is good

Reproduced with permission of the copyright owner. Further reproduction prohibited without permission.

Vc = copulative verb

Vc : [hi] cvT isc

Example: < hi > cvT < s > < e > < k >

{ hi wé· s }

‖ hí· we s ‖

/ hí·wes /

he is

Reproduced with permission of the copyright owner. Further reproduction prohibited without permission.

700. PARTICLES

710. Particle stems.

There are fifteen stem classes

class	examples of members	meaning
710.1 adverbial modifiers	{q̓u}	awfully, terribly
	{ʼu}	very
710.2 comparatives	{qétu}	more
	{tu·sk}	more
710.3 relative	{ke}	which, that etc.
710.4 indefinite	{kú?}	maybe, possibly
710.5 negatives	{ce?ye}	not (to possess)
	{we·t̓u}	no, not
	{we·c̓u}	no longer
	{mi?s}	not
710.6 coordinating connectives	{ke·}	and
	{mét̓u}	but
	{ʼe·tu}	then
	{kewé}	then
	{weq}	and

Reproduced with permission of the copyright owner. Further reproduction prohibited without permission.

class	examples of members	meaning
710.7 subordinating connectives	{'inekí·k}	although
	{'etke}	because
	{ć̲e̲le̲wí}	if
	{qu̲ʔc}	as soon as
	{qece}	if, even when
710.8 question particle (Q)	{we·t}	(question marker)
710.9 interrogatives	{mí̲ne}	where
	{me̲c}	how much
710.10 final particle	{neʔé}	isn't it?
710.11 hortatory (H)	{ke}	let me/us
710.12 prenominal	{'iske}	like
710.13 interjectory	{'e·hé}	yes
710.14 adverbial particles	{we̲tí·sk}	yesterday, tomorrow
	{wé̲·qu̲}	now
	{ć̲e̲ʔé̲}	exactly
	{ké̲ʔle̲}	just
	{qece}	even
	{kúnk̓u}	always
	{kuʔús}	thus
710.15 pronominal	{'é·}	you (sg.)

Reproduced with permission of the copyright owner. Further reproduction prohibited without permission.

720. Suffixes.

Suffixes occur with the following stems: relative {ke}, indefinite {kú?}, negative {mí?s}, question particle {we·t}, interrogatives {míne} and {mec}, adverbial particle {qece}, and pronominal {'e·}. The two kinds of suffixes are pronominal and plural suffixes. The latter is found with {'e·} 'you (sg.)' and the former with the rest.

721. Pronominal suffixes.

The pronominal suffixes of particles are in two major sets: (1) one indicating only the subject, and (2) the other indicating both subject and object.

721.1 The subject suffix set has the following membership and allomorphs:

		types: 1a	1b	2a	2b
{k}	1st person sg.	e·k	kek	·k	k
{m}	2nd person sg.			m	m
{nm}	1st person pl.	e·nm	ke·nm	·nm	nenm
{pem}	2nd person pl.			pem	pem

The set 1a occurs with {mí?s} 'not' and {we·t} question particle; 1b with {míne} 'where' and {mec} 'how much'; 2a with {qece} 'even, even when' and {ke} relative;

Reproduced with permission of the copyright owner. Further reproduction prohibited without permission.

2b with {kú?} 'maybe, possibly.'

{k} may occur with a plural subject morpheme in the same sentence, e.g., /wé·te·x kusí·x/ 'do we go?' ({we·t} question particle; /kusí·x/ 'we go'). In such a case, the second person is not included in the 'we.' When the second person is included, {nm} is used.

Examples of type 1a:

‖e·k‖:

/mí?se·x ?í·n manma?í kiyú?./ 'I cannot go' ({mí?s} 'not'; {'í·n} 'I'; {menme?í} 'how,' 'in any way'; {kú·} 'go'; {u?} future 638.6)

‖e·nm‖:

/mí?se·nm nú·n manma?í pekiyú?./ 'we cannot go in any way.' ({nú·n} 'we'; {pe} plural subject prefix)

The type 1a does not occur with second or third person subject:

/mí?s ?í·m manma?í kiyú?./ 'you (sg.) cannot go in any way.'

/mí?s ?ipí manma?í hikiyú?./ 'he cannot go in any way.'

/mí?s ?imé manma?í pekiyú?./ 'you (pl.) cannot go in any way.'

Reproduced with permission of the copyright owner. Further reproduction prohibited without permission.

/mí?s ?imé manma?í hipekiyú?./ 'they cannot go in any way.'

Examples of type 1b:

‖kek‖:

/mínekex wé·s./ 'where am I?' ({míne} 'where')

‖ke·nm‖:

/míneke·nm wisí·x./ 'where are we?'

In the following examples, {k} is represented by freely alternating ‖kek‖ and ‖e·k‖:

/mackex we kícuy./ 'how much money do I have?' ({mec} 'how much'; ‖we‖ an allomorph of {wé·} 'be'; {kícuy} 'metal,' 'money')

/mace·x we kícuy./ 'how much money do I have?'

Examples of type 2a:

‖·k‖:

/qece·x ?í·n kú·se./ 'even I am going.' ({qece} 'even')

‖m‖:

/qecem ?í·m kú·se./ 'even you (sg.) are going.'

‖·nm‖:

/qece·nm nú·n kusí·x./ 'even we are going.'

Reproduced with permission of the copyright owner. Further reproduction prohibited without permission.

‖pem‖:

/qecepem ʔimé kusi·x./ 'even you (pl.) are going.'

Examples of type 2b:

‖k‖:

/kúʔx we·t kiyúʔ./ 'I might go.' ({kúʔ} indefinite; {we·t} meaning uncertain; {ku·} 'go'; {uʔ} future 638.6)

‖m‖:

/kúʔm we·t kiyúʔ./ 'you (sg.) might go.'

‖nenm‖:

/kúʔnenm we·t pekiyúʔ./ 'we (including you) might go.'

‖pem‖:

/kúʔpem we·t pekiyúʔ./ 'you (pl.) might go.'

Reproduced with permission of the copyright owner. Further reproduction prohibited without permission.

721.2 The subject-object suffix set has the following membership and allomorphs:

	types:	3a	3b
{k}	1st person sg.	e·k	k
{m}	2nd person sg.		m
{nm}	1st person pl.	e·nm	nm
{pem}	2nd person pl.	epe	pe (before {mek})
			pem (elsewhere)
{mek}	1st person subject and 2nd person object	mek (after {pem})	mek
		emek (elsewhere)	

{pem} in 3a is found only before {mek}. {k}, {m}, {nm} and {pem} are found either as the subject or the object. {mek} indicates that the subject is in the first person and the object in the second person.

The subject-object pronominal suffixes are used to express the following combinations of subject and object. In the following notation, 2s-1p, for example, indicates that the morpheme is used when the subject is second person singular and the object is first person plural.

{k}: 1s-3s, 1s-3p, 3s-1s, 3p-1s

{m}: 2s-1s, 2s-1p, 2s-3p, 3s-2s, 3p-2s, 2s-3s

Reproduced with permission of the copyright owner. Further reproduction prohibited without permission.

{nm}: 3s-1p, 1p-3s, 1p-3p, 3p-1p

{pem}: 3s-2p, 2p-1s, 2p-3s, 2p-1p, 2p-3p, 3p-2p

{mek}: 1s-2s, 1p-2s

{pem}{mek}: 1s-2p, 1p-2p

The set 3a occurs with {we·t} question particle; and 3b with {ke} relative particle.

Examples of type 3a:

‖e·k‖:

/we·te·x ʔetwi·kce./ 'Shall I go with him?'

({'e} third person object prefix 631;

{tîwi·k} 'accompany,' 'follow')

/we·te·x ʔené·stiwikce./ 'Shall I go with them?'

({ne·s} plural object prefix 634)

/we·te·x hitwi·kce./ 'Would he go with me?'

({hi} third person subject prefix 631)

/we·te·x hitwi·kcix./ 'Would they go with me?'

‖e·nm‖:

/we·te·nm hitwi·kce./ 'Would he go with us?'

/we·te·nm ʔetwi·kcix./ 'Shall we go with him?'

/we·te·nm ʔené·stiwikcix./ 'Shall we go with them?'

/we·te·nm hiné·stiwikcix./ 'Would they go with us?'

Reproduced with permission of the copyright owner. Further reproduction prohibited without permission.

‖emek‖:

/we·temex tiwí·kce./ 'Shall I go with you (sg.)?'

/we·temex tiwí·kcix./ 'Shall we go with you (sg.)?'

‖epe mek‖:

/we·tepemex tiwí·kce./ 'Shall I go with you (sg.)?'

/we·tepemex tiwí·kcix./ 'Shall we go with you (pl.)?'

Examples of 3b:

‖k‖:

/kex ka· ʔewníye tí·ʔmes/ 'when I gave him the book ...' ({ké·} 'and' and means 'when' with {ke}; {ʔíní·} 'give'; {tí·ʔmes} 'book')

/kex ka· ʔené·cníye tí·ʔmes/ 'when I gave them the book ...' ({ne·s} plural object prefix 634)

‖m‖:

/kem ka· ʔiní·me tí·ʔmes/ 'when you (sg.) gave me the book ...' ({m} locative 1, 637)

/kem ka· né·cníme tí·ʔmes/ 'when you (sg.) gave us the book ...'

‖nm‖:

/kenm ka· hiné·cníye tí·ʔmes/ 'when he gave us the book ...'

/kenm ka· ʔepeʔníye tí·ʔmes/ 'when we gave him the book ...' ({pe} plural subject prefix 633)

Reproduced with permission of the copyright owner. Further reproduction prohibited without permission.

‖pem‖:

/kepem ka· pe?niye tí·?mes/ 'when you (pl.) gave me the book ...'

/kepem ka· ?epe?níye tí·?mes/ 'when you (pl.) gave him/them the book ...'

‖mek‖:

/kemex ka· ?iníye tí·?mes/ 'when I gave you (sg.) the book ...'

/kemex ka· pe?níye tí·?mes/ 'when we gave you (sg.) the book ...'

‖pe mek‖:

/kepemex ka· ?iníye tí·?mes/ 'when I gave you (pl.) the book ...'

/kepemex ka· pe?níye tí·?mes/ 'when we gave you (pl.) the book ...'

722. Plural suffix.

The single plural suffix {tk} occurs after {'é·} 'you (sg.),' e.g.,

/?imé ?é·tx panáhpayko?/ 'you (pl.) will bring it'

Reproduced with permission of the copyright owner. Further reproduction prohibited without permission.

730. Particle constructions.

The question word (QW) and hortatory word (HW) have the following constructions:

QW: Q PS

HW: H PS.

In the above notatin Q is question particle, H hortatory particle, PS pronominal suffixes. Examples are given in 821.

Reproduced with permission of the copyright owner. Further reproduction prohibited without permission.

CHAPTER THREE

800. SYNTAX

810. The tactic units of the sentence are:

I (interjections)

C (connectives)

At (attributives)

S (subjects)

O (objects)

L (locatives)

Vc (copula)

Vg (general verbs)

Vp (possessive verbs).

These are described in order in the sections which follow.

811. Interjections (I).

The following are members of interjections:

1. Interjectory particle (710.13).
2. A construction involving the class of vocative suffixes, < e > (535): I: sT e (536).

812. Connectives (C).

The two subdivisions of this unit are: (1) coordinating and (2) subordinating connectives.

Reproduced with permission of the copyright owner. Further reproduction prohibited without permission.

812.1 The coordinating connectives (Cc) are coterminous with the class listed in 710.6 as coordinating connective particles.

812.2 The subordinating connectives (Cs) are:

1. Subordinating connective particles in 710.7.
2. A construction involving a relative particle (710.3) with appropriate pronominal suffixes (721), e.g.,

{ke ke·} 'when'

{ke ku pe} 'where''at which place'

{ke míne} 'where''at which place'

{ke mi k} 'where''to which place'

{ke ku?ús} 'as'

{ke ki wéyl} 'as long as'

813. Attributives (At).

The following are found as constituents of attributives:

1. substantive themes (sT) in which general noun stems (nS), numeral stems (nuS), demonstrative stems (dS), or adjective stems (aS) occur as constituents. These substantive themes are At1, At2, At3, and At4 respectively.
2. a substantive theme followed by < nim > 531 (At 5).
3. a substantive theme with < ʾéyn > 534, or < k > 533 (At 6).

Reproduced with permission of the copyright owner. Further reproduction prohibited without permission.

4. a substantive theme in which a verb theme (vT) and < ʾeˑt > occur as constituents (At7).
5. an adverbial modifier 710.1 (At8).
6. a construction of a substantive theme and a comparative particle 710.2 (At9).
7. a construction with an indefinite particle 710.4 (At10).
8. a construction with a prenominal particle 710.12 (At11).
9. an adverbial particle {kuʔús} 'thus' (At12).

814. Expanded substantive themes (esT).

In this section, constructions involving substantive themes (sT) 520 as heads and extending over more than one morphological word, namely, expanded substantive themes (esT) will be discussed.

While all six subclasses of substantive stems - general noun stems (nS), numeral stems (nuS), kinship term stems (kS), personal pronoun stems (ppS), demonstrative stems (dS), and adjective stems (aS) - occur as heads in substantive themes, in an expanded substantive theme a dS or aS does not occur as head of construction.

814.1 Expanded general noun themes seldom involve more than six morphological words. The expansion is mostly regressive, however, frequently in personal names (with

Reproduced with permission of the copyright owner. Further reproduction prohibited without permission.

At7 or At7, cf. 813) a head may precede, for example,

esT: sT At4

/ʔiceyé·ye ʔapsí·n/ 'Coyote With-Flint'

(/ʔáps/ 'flint')

esT: sT At7

/wiyetené·t ʔilp̓íl̓p/ 'Red Sun' (/ʔilp̓íl̓p/ 'red')

For other expansions to the right, see examples with At6, At11 and At12 below. In some cases the order is not rigid, e.g.,

esT: At1 At5 sT $\overset{f}{\sim}$ At1 sT At5

/yox̣ ʔipním ʔiní·t/ $\overset{f}{\sim}$ /yox̣ ʔiní·t ʔipním/

'that house of his' (/ʔipním/ 'his'; /ʔiní·t/ 'house')

Other examples are:

esT: At1 sT

/titó·qan ʔiwé·pne/ 'Indian wife'

esT: At2 sT

/pá·x̣lo· háham/ 'five men'

esT: At3 sT

/kí· ʔískit/ 'this road'

esT: At4 sT

/ʔilx̣ní·we titó·qan/ 'many Indians'

esT: At5 sT

/ʔipním niyáʔc/ 'his child'

Reproduced with permission of the copyright owner. Further reproduction prohibited without permission.

esT: sT At6

/wapayata?wá·t Angusx/ 'assistant to Angus'

esT: At7 sT

/qeqé·wi̓tes kú·s/ 'whiskey' ({qeqé·wi} 'be drunk'; {kú·s} 'water')

esT: At8 sT

/q̓o qí·wnix/ 'very old man' ({qí·wn} 'old man')

esT: At9 sT

/qétu himé·q̓is wé·tes/ 'bigger land' ({himé·q̓is} 'big')

esT: At10 sT

/kú? mac ?iní·t/ 'some house'

esT: sT At11

/ná·qc hekípe ?iske cicámox/ 'one looking like negro' ({né·qc} 'one'; {hekípe} 'seem'; {ʾiske} 'as, like'; {cicémuk} 'negro')

esT: At5 At4 sT

/?ipním kúckuc miyá?c/ 'his small child' (/kúckuc/ 'small')

esT: At2 At1 sT

/naqc hí·k̓ay lálx/ 'a cup of coffee' ({hí·k̓ey} 'cup'; {lélk} 'coffee')

esT: At8 At9 sT

/q̓o qétu tá?c tiwé·t/ 'much better medicineman' ({té?c} 'good'; {tiwé·t} 'medicineman')

Reproduced with permission of the copyright owner. Further reproduction prohibited without permission.

esT: At3 At4 At7 sT

/kí· ta?sníx sa·pi·kí?n wálc/ 'this awfully sharp knife' ({se·pi·ki?n} 'sharp')

esT: At4 At7 At5 sT

/?iléxni qiyá·ẃis ?imé·snim núkt/ 'much dry deer meat'

esT: At10 At8 At4 sT A12

/kú? mac q̓o ta?sníx cú·yem ku?ús/ 'some very good fish like that'

814.2 Expanded numeral themes.

The numeral system of the language is multiplicative and quinary-decimal. The multiplicative and quinary systems are indicated by affixes within morphological word boundaries, and are dealt with in 520 (pp. 76f.). Therefore, all the digits, 20, 300, 5000 etc. are covered under sT with nuS as the head. The others such as 21, 310, 5432 are expressed by expanded numeral themes. A connective particle {weq} (710.6) participates in this construction.

esT: nuT {weq} nuT

/pú·timt waxˀ ná·qcwa/ 'eleven (men)'

Along with the expanded numeral theme, there is a constructional doublet /pú·timwe waxˀ ná·qcwa/ 'eleven (men)' with classifiers occurring with each word in concord.

Reproduced with permission of the copyright owner. Further reproduction prohibited without permission.

814.3 Expanded kinship term themes involve only personal pronoun stems with {nim}, e.g.,

esT: At5 kT

/ʔipnim pist/ 'his father'

This construction provides the language with the possibility of doublets, e.g., /naʔtó·t/ 'my father' and /ʔí·nim pist/ 'my father.' The latter periphrastic form is more frequently used in a figurative, rather than factual father-son relationship, e.g., in religious usage.

814.4 Expanded personal pronoun themes occur only in the following form:

esT: ppT At2

/nú·n lepúʔ/ 'we two.'

815. Subject (S) and object (O).

The simple or unexpanded subject has an optional {nim} 531 and the simple object has an optional {ne} 532 as one of the constituents, the other being a substantive theme (sT), i.e.,

S: sT [nim]

O: sT [ne].

The subject with {nim} is found when the verb occurs with {hi} 631 or with {pe·} 632. Elsewhere, the subject

Reproduced with permission of the copyright owner. Further reproduction prohibited without permission.

is without {nim}. The object with {ne} is found when the verb occurs with {'e} 631 or {pe·} 632. Elsewhere, the object is without {ne}.

The expanded subject and object are:

S: esT [nim]

O: esT [ne].

Besides, the object may be expanded in the following way.

O': O Vf

/ʔipné hiweʔnpíse/ 'him singing' (literally 'him he-sings') as in /ʔí·n ʔamćíya ʔipné hiweʔnpíse/ 'I hear him singing'

816. Locatives (L).

The following occur as members of the locative class.

1. adverbial particles 710.14, e.g.,

/watí·sx/ 'tomorrow,' 'yesterday'

/wá·qo/ 'now'

/kaʔla/ 'just'

2. a substantive theme (sT) or an expanded substantive theme (esT) with < 'éyn > 534, or < k > 533, e.g.,

/piké·pe/ 'at mother's' (/píke/ 'mother')

/matníʔski kú·ski/ 'with boiling water'

({mét} 'boil'; {kú·s} 'water'; {ki} 533)

Reproduced with permission of the copyright owner. Further reproduction prohibited without permission.

3. a verb theme with < ʔe·t > class of suffixes (523.2), e.g.,

   /ʔú·yit/ 'at first' ({ʾú·yi} 'begin')

4. a construction involving a prenominal particle as one of the constituents (710.12), e.g.,

   /ʔiske ʔá·la/ 'like fire' ({ʾé·le} 'fire')

   /ká?la ʔiske wé·qit/ 'just like rain'

   ({ké?le} 'just' 710.14; {wé·qi} 'rain (vb.)')

5. a construction involving an indefinite particle {kú?} 710.4, e.g.,

   /kú? masi/ 'I don't know how long' ({mesi} 'how long') as in /kú? masi kú·se/ 'I am going away for indefinite length of time'

6. a numeral theme with {éhem} 'times' (521.2), e.g.,

   /mitáham/ 'three times'

7. a construction involving a relative particle (710.3), and {ku?ús} 'thus,' e.g.,

   /ke ku?ús téhes/ 'like ice' ({téhes} 'ice')

8. a construction with adverbial modifier {ʾqu} (710.1) and adjective themes, e.g.,

   /ʾqo ʔilx̣ninix/ 'very much' ({ʾilex̣ni} 'much,' 'many'; {nik} intensifier 521.2)

9. a negative particle (710.5) or a construction involving a negative particle, e.g.,

   /wé·ʾtu/ 'not'

Reproduced with permission of the copyright owner. Further reproduction prohibited without permission.

/wé·ṭu manma?í/ 'not in any way'

10. a pronominal particle with optional plural suffix (722), e.g.,

/?é·/ 'you (sg.)' in /wí·ce ?é·/ 'you are crying'

11. a verb theme with one of the following two suffixes: {'} (locative formant 1), {?yí} (locative formant 2), e.g.,

/hipstú·ý/ 'enough' ({hipstú·y} 'be satiated')

/wece?yí/ 'on horse back' ({wé·ce} 'ride a horse')

817. Finite verbs (Vf).

The finite verbs may be divided into general verbs (Vg), copula (Vc) and possessive verbs (Vp).

817.1 General verbs (Vg).

The simple or unexpanded verbs are found in three types of construction (639.2):

Vg : [hi] [pe] [ne·s] gvT isc

Vg : [pe·] gvT isc

Vg : [hi] sT.

Expanded general verb includes one obligatory general verb, an optional general verb in the same person, number, and tense-modes, and optional objects.

Reproduced with permission of the copyright owner. Further reproduction prohibited without permission.

Vg' : Vg Vg

/hi?psiléhnecem hikú·tecem/ 'he came down to get water' (literally 'he-came-down he-came-after-water')

/kú·tx wilelí·kitx/ 'run away!' (to more than one person) (literally 'go! run!')

Vg' : Vg Vg O

/?ipsqilí·kcene wiye?énpsene kapó·/ 'I walked carrying coat' (literally 'I-walked I-carried coat')

Vg' : Vg O Vg

/hicapá·ɬaq̓yawya hú·kux hihínaq̓iya/ 'he finished drying hair' (literally 'he-dried hair he-finished')

Vg' : Vg O

/?iné·ku·ye konyá/ 'I drank that'

Vg' : Vg O O

/hi?níye ?í·ne le?éptit wax̣ ná·qc wa?wá·ɬam/ 'he gave me twenty-one trout' ({le?éptit weq né·qc} 'twenty-one,' {we?wé·ɬem} 'trout')

Vg' : O Vg

/mitáẃna hiná·swalawqaqa/ 'he hanged three'

Vg' : O O Vg

/síḱem titó·qana hiná·spax̣oyqana/ 'he stole horses from Indians' (literally 'horse from-Indian he-stole')

Reproduced with permission of the copyright owner. Further reproduction prohibited without permission.

Vg' : O_1 Vg O_2 (O_1 and O_2 constituting an expanded object)
/konmaná hiná·swalawqaqa yú?cmene/ 'he hanged those poor ones' (literally 'those he-hanged poor (pl. obj.)')

817.2 Copula (Vc).

The copulative verb construction is:

Vc : [hi] [pe] vcT isc.

A copula is not expanded.

817.3 Possessive verb (Vp).

A possessive verb (Vp) has a copula and an object without {ne} as constituents.

Vp : Vc O

/?ú·s lepit mamá?yac/ 'he has two children'

820. The clause (CL).

A clause is preceded by silence, {,}, or {.} and followed by either of the latter two, and contains one obligatory verb (Vg, Vc, or Vp), and optional subject and locatives.

There are following types of clauses:

(1)	general clause (CLg)	CLg : [S] Vg [L]
(2)	copulative clause (CLc)	CLc : [S] Vc S [L]
(3)	possessive clause (CLp)	CLp : [S] Vp O [L]

Reproduced with permission of the copyright owner. Further reproduction prohibited without permission.

A subject in a copulative clause always occurs without {nim} 531, and a subject in a possessive clause always occurs with {nim}.

CL : CLg + CLc + CLp

Examples:

CLg : Vg

/hiwí·ne/ 'he cried'

CLg : S Vg

/ʔí·n wí·ne/ 'I cried'

CLg : Vg S

/ha·níya Chpaman/ 'Chapman made'

CLg : S Vg L

/ʔí·nḱe ʔehípe laʔáṁ/ 'I too ate all'

CLg : S Vg L L

/kú·s hiwé·lece ʔiléx̣ni wé·qitkiṅix/

'water runs high from rain'

CLg : Vg L

/ʔamć́í·sa ć́í·qipx/ 'I heard the talk'

CLg : L Vg

/kú·mtx wiskeʔéynimtx kiné·px/ 'come here!'

(Vg : Vg Vg)

CLg : L L Vg

/kí· kulé·wit taxc píʔamxnoʔ/ 'we'll soon have a meeting this evening'

Reproduced with permission of the copyright owner. Further reproduction prohibited without permission.

CLc : Vc S

/hi·wes qí·wn/ 'he is an old man'

CLc : S Vc S

/há·ma hí·wes qí·wn/ 'the man is an old man'

CLc : Vc S S

/hí·wes há·ma qí·wn/ 'the man is an old man'

CLc : Vc S L L

/hí·wes ʔicwéys ke kuʔús téhes q̓o tayamí·nax/

'it is cold like ice even in summer'

CLc : S L Vc S

/Chapman káʔlo hiwé·ke so·yá·po·/ 'Chapman was just a white man'

CLp : Vp

/ʔú·s lepit mamáʔyac/ 'he has two children'

CLp : S Vp

/ʔí·nim we·s kí· wé·tes/ 'this is my land'

821. The derivative clause.

The two types of derivative clauses are:

(1) interrogative clause (CLi) CLi : QW CL

Examples:

/wé·te·x kú·se/ 'can I go?'

/wé·temex lálk̓iní·se/ 'shall I give you coffee?'

Reproduced with permission of the copyright owner. Further reproduction prohibited without permission.

(2) hortatory clause (CLh) CLh : HW CL

Examples:

/kex kú·s/ 'let me go'

/ke·mex ʔí·n ʔínis/ 'let me give you'

In a hortatory clause, the verb is most frequently in the indicative perfect 638.2.

822. The dependent clause (CLd).

In a dependent clause (CLd), any of the clauses may occur in constituency with a subordinating connective (Cs) 710.7.

CLd : Cs CL

/qéce ʔimtó·tapmaʔá pó·pciʔyawna/ 'even when they killed your fathers'

/ʔetke we·s waqí·ma/ 'because I am old'

/ka ká· hinúxne/ 'when he died'

/ke mípx pekiyúʔ/ 'whereever we will go'

/ke kuʔús ʔipelí·kt hiʔlé·sece/ 'as a thunder rolls'

/ke kiwáyl kí· té·mux hiwekúʔ/ 'as long as this footprint will be here'

Reproduced with permission of the copyright owner. Further reproduction prohibited without permission.

830. The phrase (Ph).

The following construction types are phrases.

831. Interjectory phrase (IPh). I (811) followed by {,} or {.}.

/ʔe·hé./ 'Yes.'

/qaláca ʔ./ 'Grandfather!'

832. General phrase (GPh). S, O, or L followed by {,} or {.}.

/wé·ɬu./ 'No.'

/pá·ʔys wé·ɬu neʔé./ 'Perhaps not, huh?'

840. The sentence (SEN).

One of the two immediate constituents of a sentence is {.} (which in tern may be in IC with a final particle 710.10), the other being one of the following:

841. The minor sentence. Any phrase noted above.

SEN: IPh.

/ʔe·hé./ 'Yes.'

SEN: GPh.

/ʔimé·cteʔqeni·n./ '(man's name).'

Reproduced with permission of the copyright owner. Further reproduction prohibited without permission.

842. The major sentence. Any construction with an obligatory clause (CL), or derivative clause, and optional dependent clause (CLd) and phrases (Ph).

SEN : CL.

/hiwí·ne./ 'He cried.'

/hiná·swalawqaqa mitá·ẃna ʔetke./

'He hanged three already.'

SEN : IPh CL.

/ʔe·hé, qoʔc ʔiná·taʔlatwisa./

'Yes, I am already tired from talking.'

SEN : GPh CL.

/wá·qo, hiné·steqekiyu·six./

'Now, they are after us.'

SEN : CL CLd.

/ʔí·n ʔeslé·wqitwece há·cwala, ka ká· ʔimé hiʔnaḱaksix hípt./ 'I watch the child, while they are gathering food.' CL and CLd in this sentence are reversable.

SEN : CLd CL.

/ʔinekí·x ʔipí hiwé·ke wíleke?yke?wé·t, mét̓u c̓awí·n wé·t̓u ʔipním hiʔpé·twixne ʔí·ne./

'Even though he was a runner, he was unable to overtake me.'

Reproduced with permission of the copyright owner. Further reproduction prohibited without permission.

When more than one CL occurs in a sentence, one of the constituents may be a coordinating connective (Cc) 710.6.

SEN : Cc CL Cc CL.

/ká· wá·qo pu·q̓ú·pe pipísne ka· ʔipí hiʔnekéhte té·pul./ 'He broke the bone and took out the marrow.'

850. Concord and agreement

851. Concord. When morphologically appropriate, affixal elements occur distributively with every member in a substantive expansion, with the exceptions noted in expanded substantive themes (esT).

With {kiṅik} 'from' 533:

/koní·x ʔiní·ttalamkiṅix/ 'from the roof of that house' (literally 'from-that from-house-roof')

With {nim} (possessive-nominative) 531:

/kúckucnim mamayaʔásnim ḱó·maynin/ 'children's disease' (literally 'small's children's disease')

With {ne} (objecttive) 532:

/ʔá·yatona siḱé·mne/ 'mare (object case)' (literally 'female (object case) horse (object case)'

Reproduced with permission of the copyright owner. Further reproduction prohibited without permission.

With {pe} 'at' 534:

/konyá ya?wí·cpa kú·spe/ 'in that cold water'
(literally 'in-that in-cold in-water')

852. Agreement. When there is an objective prefix {'e} (631), or subject-object prefix {pe·} (632) in the finite verb, the object in the sentence occurs with an object suffix {ne} 532, e.g.,

/tiwí·kce kí· ?ískit./ 'I am following this road.'

/?etwí·kce kínye ?iskíne./ 'I am following this road.'

/sayqíca miyá?c./ 'I admire a child (mine).'

/?asayqíca miya?ásna./ 'I admire a child (his).'

When three persons are involved expressed by an affective or benefactive suffix {é·y} 620 in the finite verb, the following agreement is observed.

/ki·met ka· pó·pci?yawcana miya?ásna kúksnim./
'Then they killed Cook's son.'

/kí·met ka· pó·pci?yawna?ysana kúksne miyá?c./
'Then they killed Cook's son' (they dared to, they went so far as to, they killed his son causing him to suffer)

Reproduced with permission of the copyright owner. Further reproduction prohibited without permission.

900. TEXT WITH ANALYSIS

The following is the opening section of a long text on the Nez Perce War of 1877, as told by Mrs. Agnes Moses (1868?-1960). Mrs. Moses was one of the last monolingual speakers of this language. Her text is selected as indicative of the state of the language relatively little influenced by English. The analysis was made posthumously with the assistance of Mrs. Elizabeth Wilson.

910. Phonemic transcription.

1. ʔú·yitiwćé·ye pí·wapciʔyawn ha·níya cépmin. 2. mitá·ẃna hiná·swalawqaqa hími·snim hú·sus ka· ʔiceyé·ye ʔapsí·sna ka· ná·qc ʔattó·laʔysa. 3. cépmin káʔlo hiwé·ke so·yá·po·. 4. cépmin konmaná hiná·swalawqaqa káʔlo lilḱúx yúʔcmene. 5. ʔiwé·pneki hiná·ssiyawna. 6. káʔla titó·qan ʔiwé·pne ʔewé·ke, cépmin weʔnikí·n so·yá·po·. 7. tá·mnaqahtq̓inm há·ma ʔewé·ke hími·snim hú·sus.

Reproduced with permission of the copyright owner. Further reproduction prohibited without permission.

920. Free translation.

1. At first the war started and Chapman[1] started it. 2. He hanged three men; Wolf's Head, Coyote With-Flint, and the third I have forgotten. 3. Chapman was just a white man. 4. Chapman hanged those poor ones for no reason. 5. Because of his wife he was suspicious. 6. This white man named Chapman had an Indian wife. 7. Wolf's Head was Tá·ʔmnaqahtq̓it's husband.

930. Analysis.

The text is given in phonemic, morphophonemic, and morphemic notations. Tactical classes and their constructions are indicated with reference to pertinent sections by numbers in parentheses.

---

[1]This is probably Arthur L. Chapman, who fired at the Indians with the flag of truce (McWhorter 1940: 56) and was the official interpreter at Chief Joseph's surrender (Howard and McGrath 1941: 282).

Reproduced with permission of the copyright owner. Further reproduction prohibited without permission.

Reproduced with permission of the copyright owner. Further reproduction prohibited without permission.

1. beginning it became war he made Chapman.

/ ʔú·yitiwćé·ye + pí·wapciʔyawn + ha·níya + cépmin .

‖ ʼú·yi t hi wîćé· ye + pí· wep ciʔyew n + hi he·ní ye + cépmin .

{ ʼú·yi t + hi wîćé· e + pi· we·p ciʔyew t + hi he·ní e + cépmin .

< gvS ʔé·t hi gvS isc pi· aprx* gvR ʔé·t hi gvS isc nS

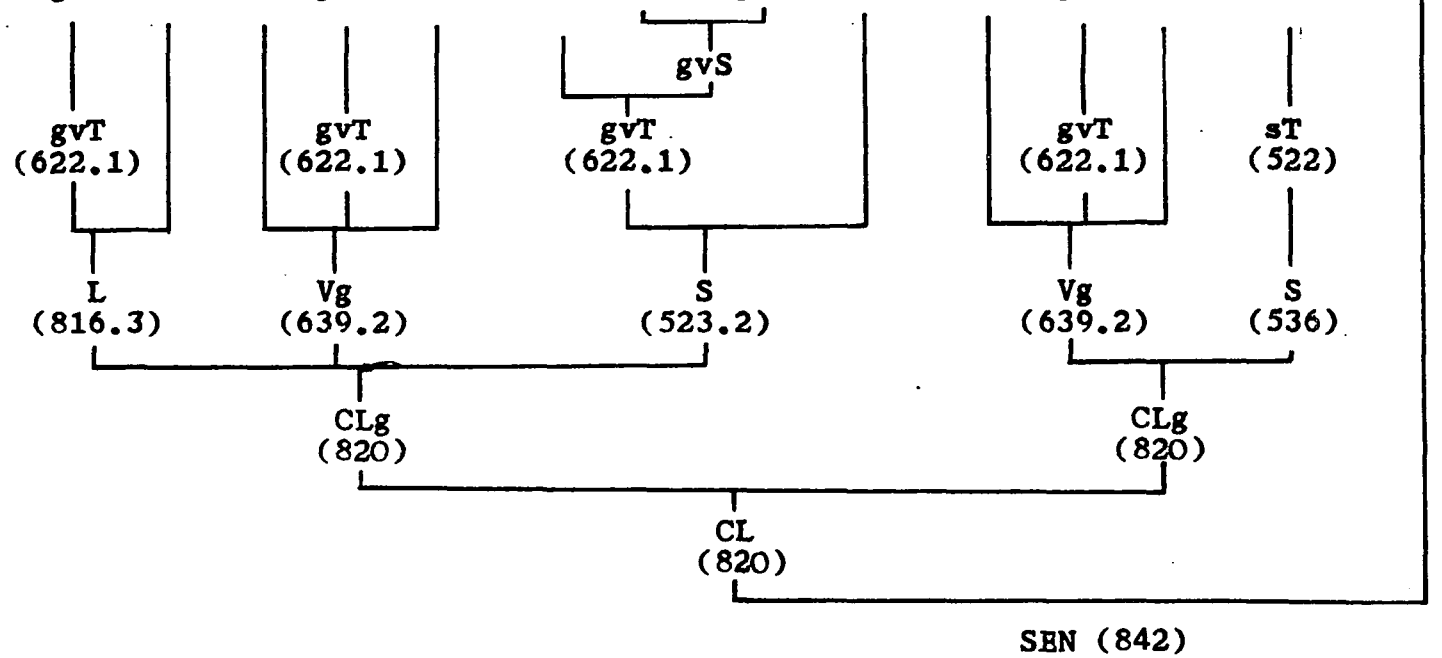

* aprx: adverbial prefix

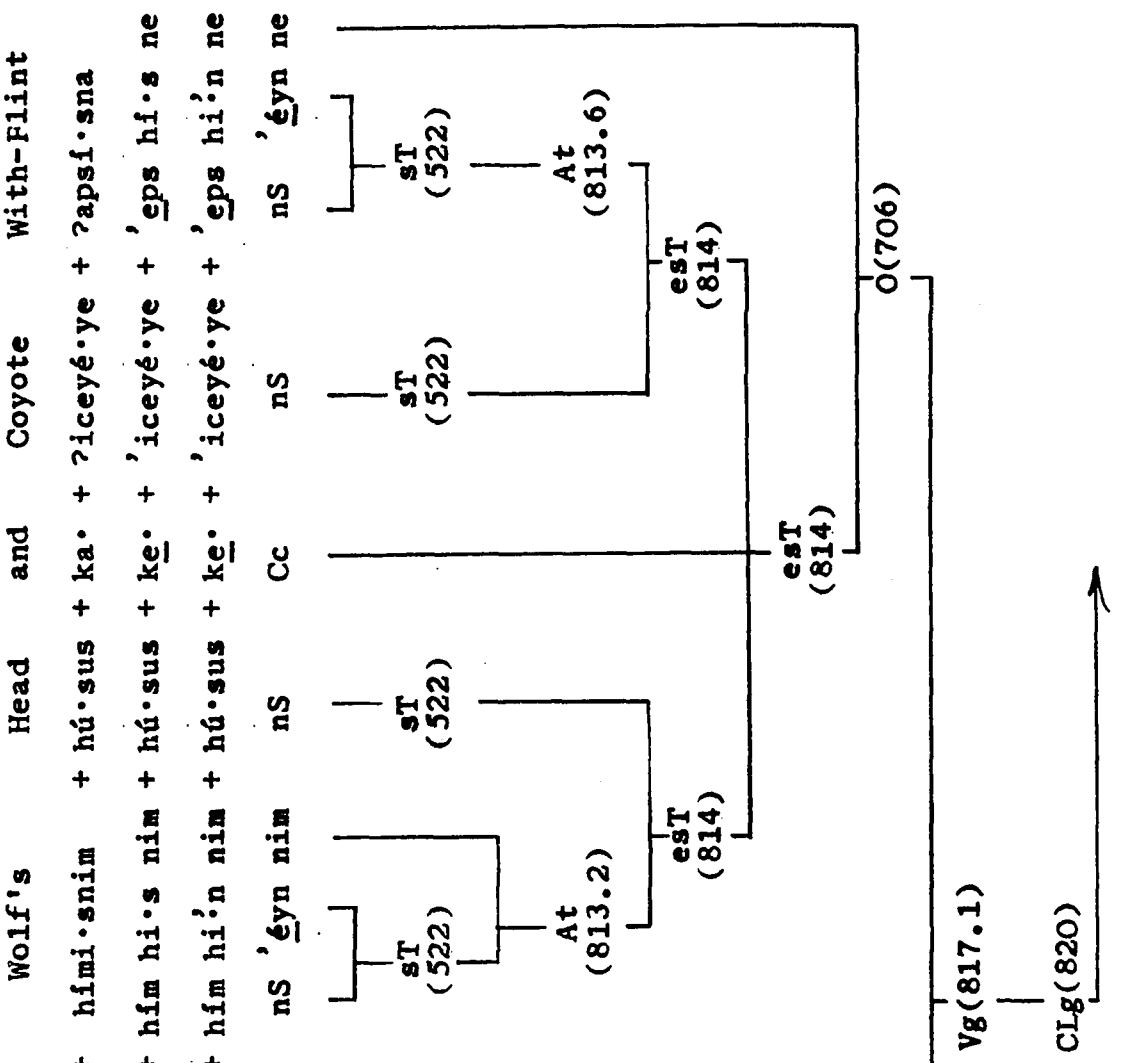

Reproduced with permission of the copyright owner. Further reproduction prohibited without permission.

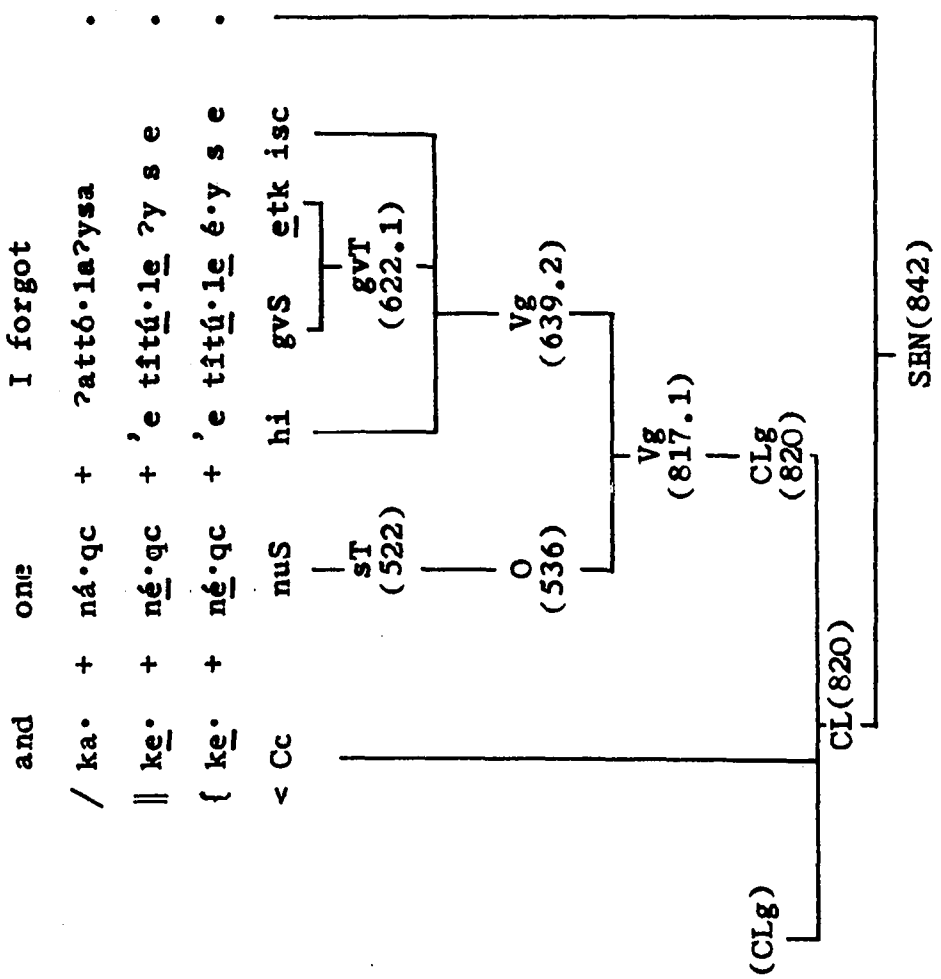

Reproduced with permission of the copyright owner. Further reproduction prohibited without permission.

3. Chapman just he was white man

/ cépmin + ká?lo + hiwé·ke + so·yá·po· .

‖ cépmin + ké?lu + hi wé· ke + su·yé· pe we .

{ cépmin + ké?lu + hi wé· e + su·yé· pe we .

< nS hi cvS isc nS 'éyn we

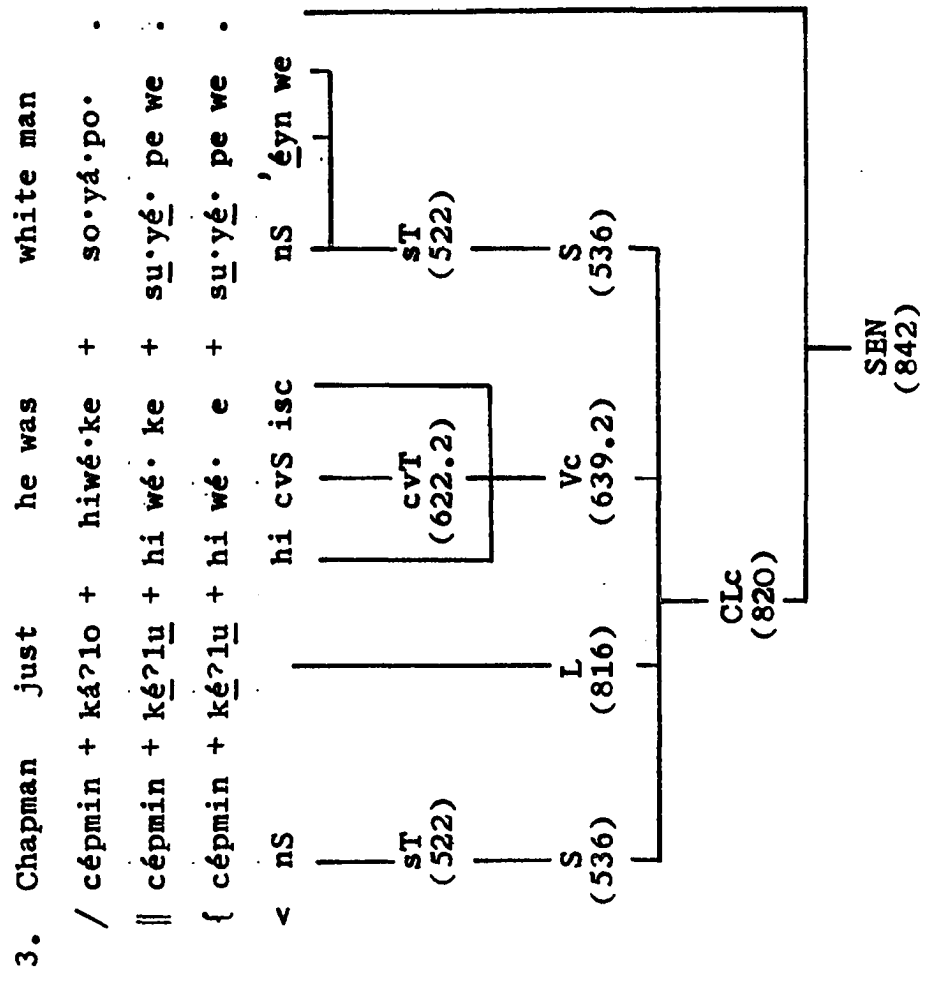

Reproduced with permission of the copyright owner. Further reproduction prohibited without permission.

4. Chapman those he hanged just for nothing poor(pl.)

/ cépmin + konmaná + hiná·swalawqaqa + ká?lo + liĺkúx + yú?cmene .

‖ cépmin + kun me né + hi né·s welewqeq e + ké?lu + liĺkúx + yú?c me ne .

{ cépmin + ku me ne + hi ne·s welé·wqeq e + ké?lu + liĺkúx + yú?c me ne .

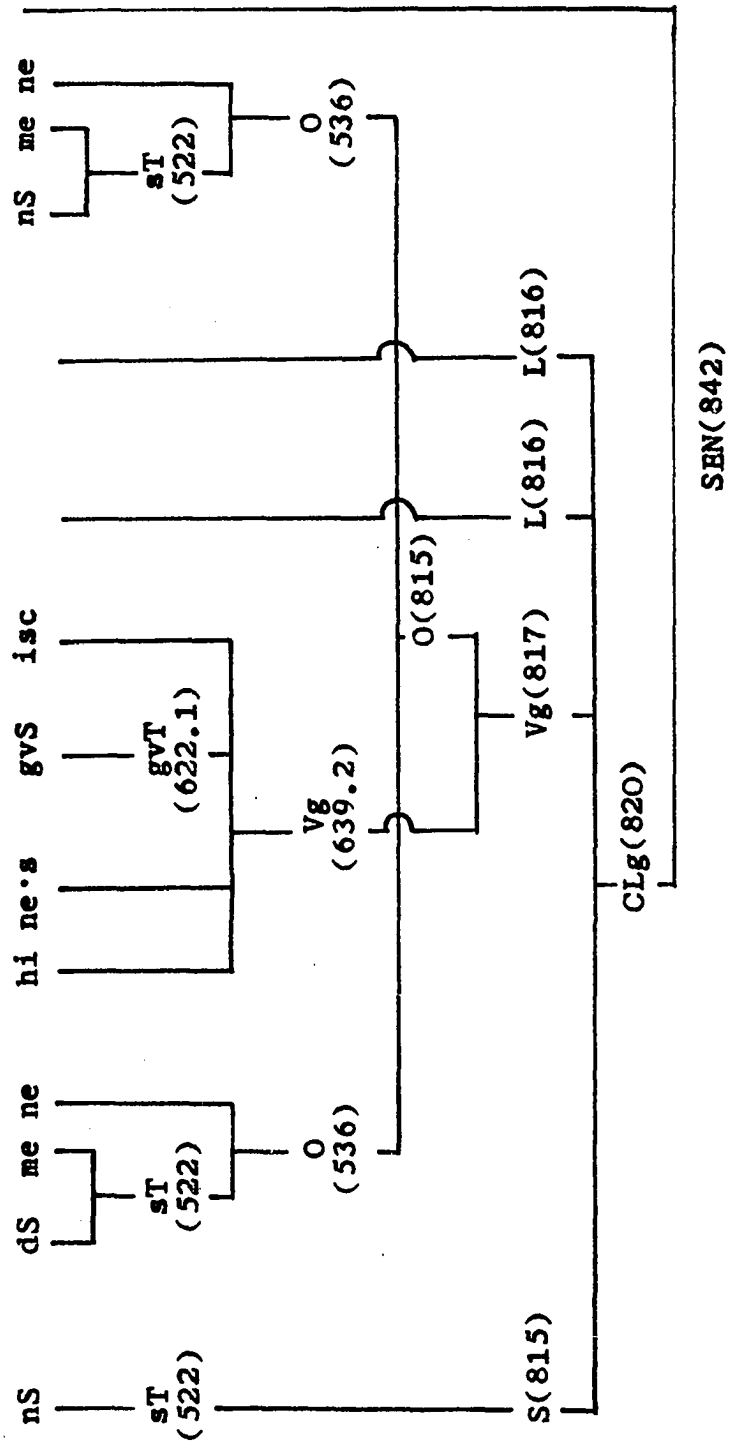

Reproduced with permission of the copyright owner. Further reproduction prohibited without permission.

5. because of wife he suspected .

/ ʔiwé·pneki hiná·ssiyawna .

‖ ʾîwé·pne ki + hi né·s siyew n e .

{ ʾîwé·p ki + hi ne·s siyé·w s e .

< kS k hi ne·s gvS isc

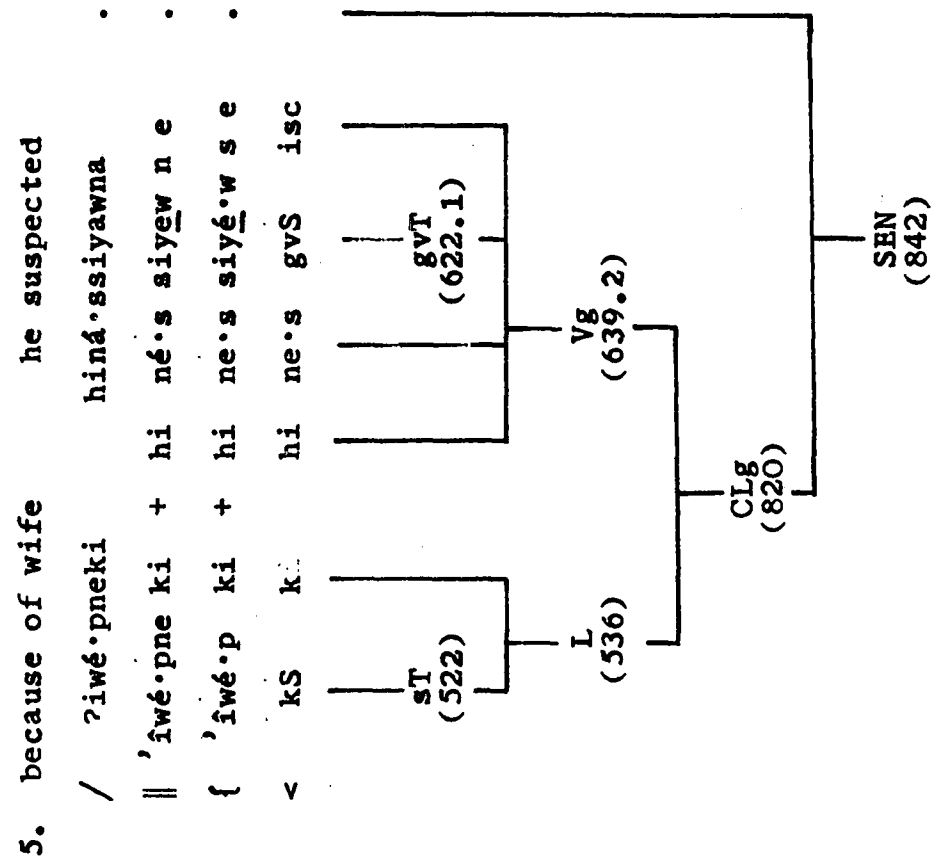

Reproduced with permission of the copyright owner. Further reproduction prohibited without permission.

6.

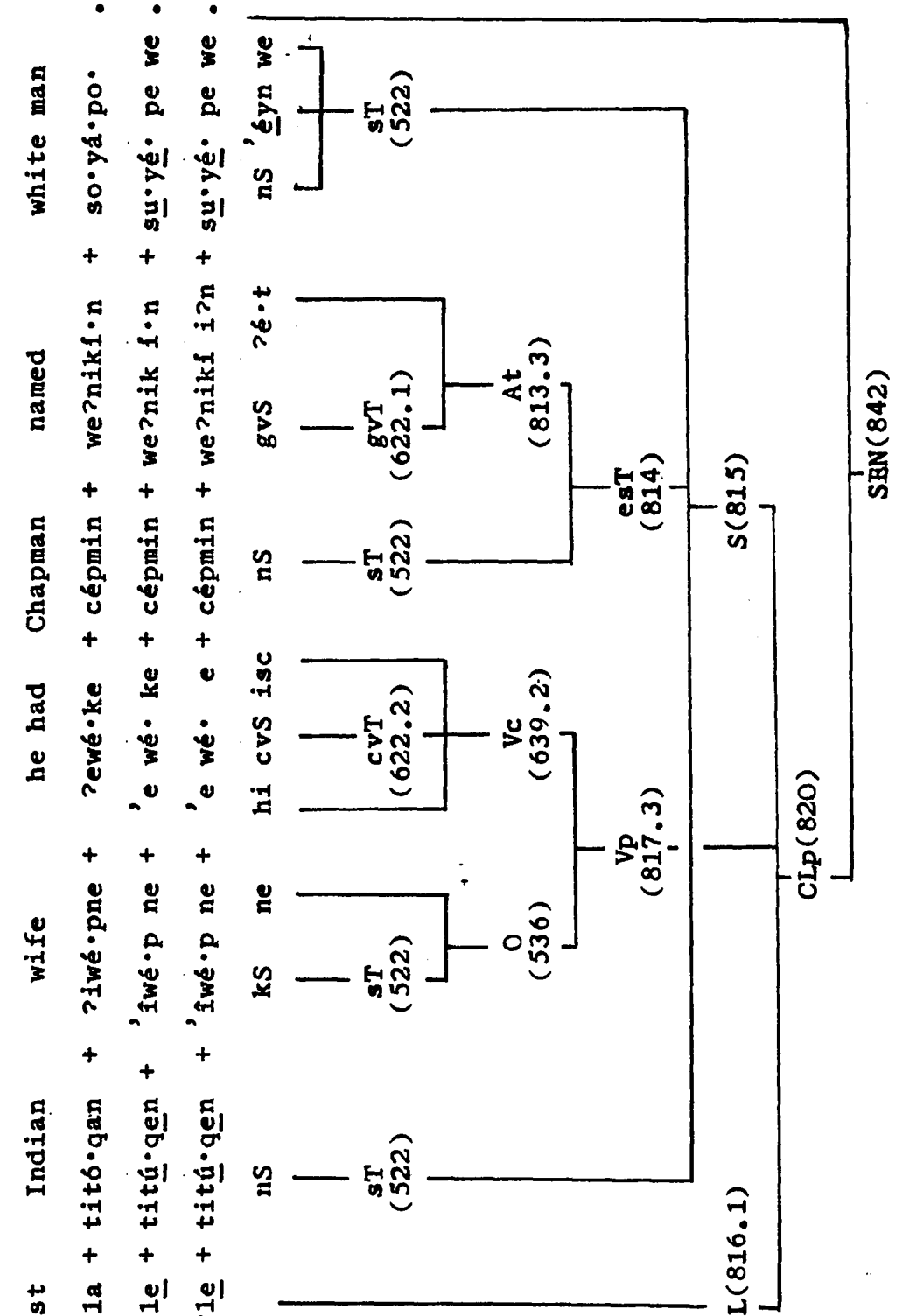

Reproduced with permission of the copyright owner. Further reproduction prohibited without permission.

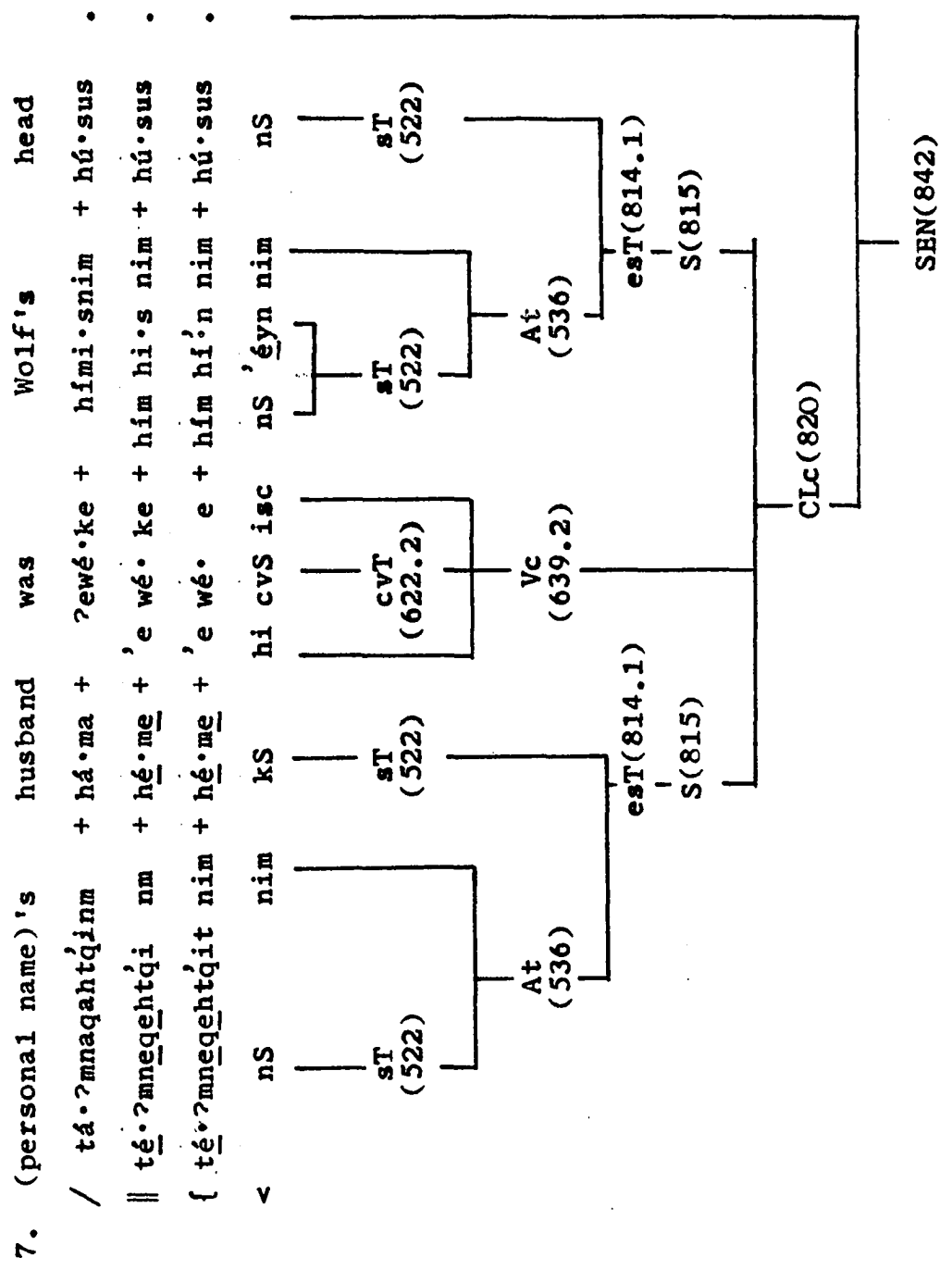

Reproduced with permission of the copyright owner. Further reproduction prohibited without permission.